Revised January 13, 2015

HARSCO INDUSTRIAL
Patterson-Kelley

P-K SONIC™ GAS FIRED BOILER

SC-2000/SC-3000/SC-4000

Natural Gas/Propane/Dual Fuel

Part # 1004905978

C.S.A Design-Certified
Complies with ANSI Z21.13/CSA 4.9
Gas-Fired Low Pressure Steam and Hot Water Boilers

ASME Code, Section IV
Certified by Patterson-Kelley

C.S.A Design-Certified
Complies with ANSI Z21.13/CSA 4.9
Gas-Fired Low Pressure Steam and Hot Water Boilers

Model Number: _____

Serial Number: _____

Start-Up Date: _____

Harsco Industrial, Patterson-Kelley
155 Burson Street
East Stroudsburg, PA 18301
Telephone: 570.476.7261
Toll Free: 877.728.5351
Fax: 570.476.7247
www.harscopk.com

©2015 Harsco Industrial, Patterson-Kelley
Released: 1/13/15

INSTALLATION & OWNER'S MANUAL

Installation and Operation Quick Reference

Fuel/Gas Supply

- Refer to *Section 3.6* for information on proper sizing of the gas supply piping. Undersized gas piping with too much pressure drop will negatively impact the boiler's performance.
- Install a lock-up type gas regulator to supply an appropriate gas pressure as described below:

Natural Gas	Propane Gas
Minimum Inlet Pressure = 4.0" w.c. Maximum Inlet Pressure = 14.0" w.c.	Minimum Inlet Pressure = 7.0" w.c. Maximum Inlet Pressure = 14.0" w.c.

- **NOTE:** Harsco Industrial, Patterson-Kelley recommends installing an individual lock-up type gas regulator in the gas supply piping to each boiler. For installations where one master lock-up type gas pressure regulator will service multiple boilers, Patterson-Kelley recommends contacting the local regulator representative for application assistance specifying the appropriate lock-up type regulator and gas pipe sizing.

Electrical/Power Supply

- Carefully inspect the boiler's nameplate labels which describe the power supply requirements.
- Provide an appropriate power feed to the boiler with overcurrent protection:

Boiler Model	Power Supply Requirements
SC-2000 (240V)	208-240VAC, **single phase**, 60Hz sized for 15 Amps.
SC-3000 / SC-4000 (240V)	208-240VAC, **three phase**, 60Hz sized for 20 Amps.
SC-3000 / SC-4000 (480V)	460-480VAC, **three phase**, 60Hz sized for 20 Amps.

- **NOTE:** The SC-3000 & SC-4000 **MUST** be ordered to the correct voltage! **IT IS NOT POSSIBLE** to convert an SC-3000 or SC-4000 between the 240V and 480V configurations in the field.
- Prior to startup, carefully check all electrical connections for tightness as connections can come lose during shipping.

Exhaust Venting

- The P-K SONIC boilers are dual-certified as Category II & Category IV appliances, capable of operating with slightly negative to slightly positive exhaust pressure. It is critical to ensure the flue venting material is suitable for use with the boiler.
- For Category II installations, ensure the flue venting system is designed to maintain a slightly negative exhaust pressure which does not exceed -0.04" w.c.
- For Category IV installations, ensure the flue venting system is designed to maintain a slightly positive exhaust pressure which does not exceed +0.22" w.c.

Hydronics/Water Flow (SC-2000)

- The chart below represents the pressure drop (Ft of Head) versus the water flow rate (GPM) for the SONIC SC-2000. This information is useful to help size an appropriate circulation pump. Keep in mind this pressure drop represents the boiler only, additional consideration is needed for any connected piping, valves, strainers, couplings, flanges, etc.

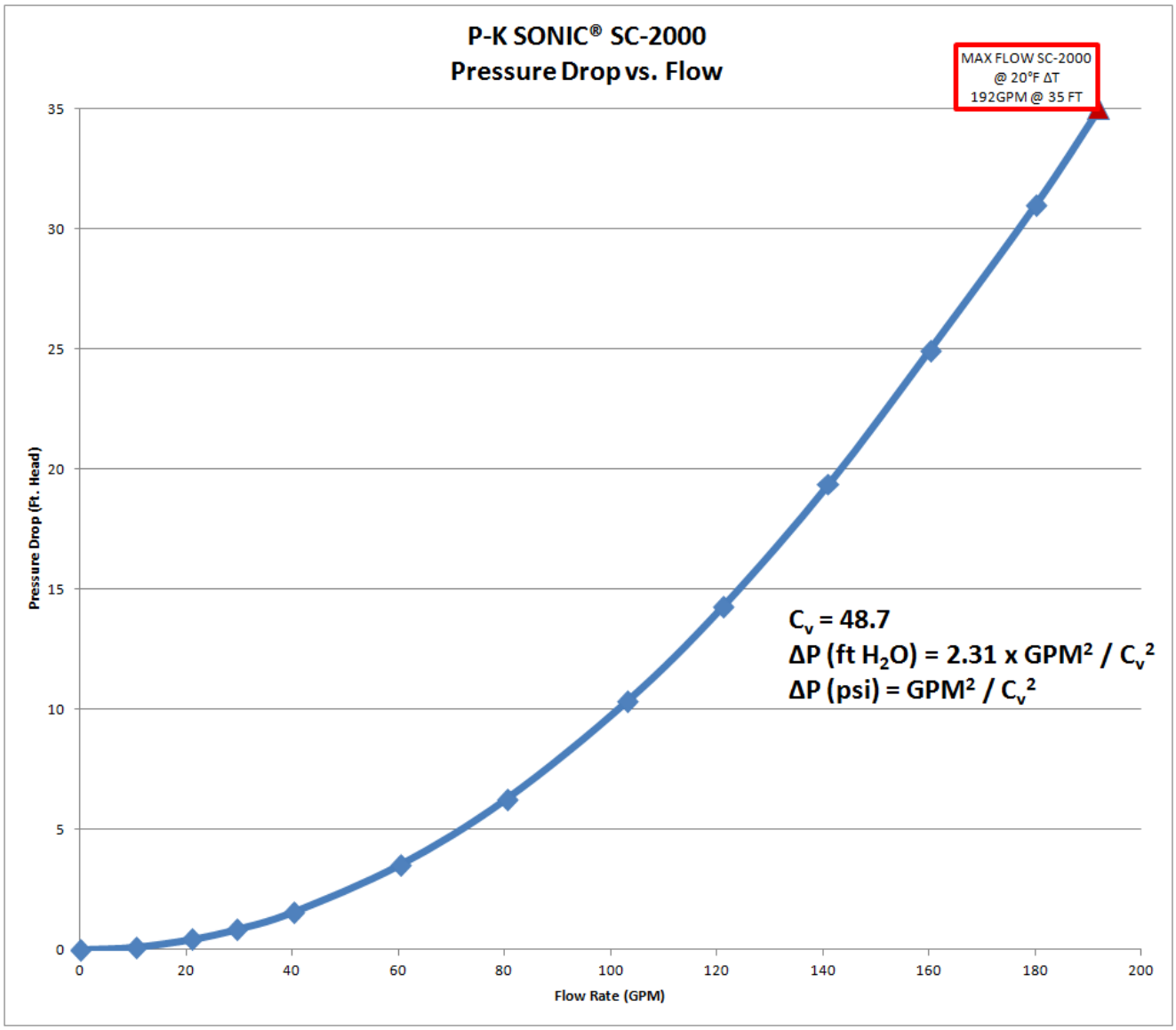

- The table below summarizes the minimum and maximum flow restrictions for the SC-2000:

Flow Condition	Boiler Operation	Flow Rate	Approximate ΔT
Maximum Flow	High Fire	192 GPM	20°F
Minimum Flow	Ignition	48 GPM	20°F
Minimum Flow	Low Fire	38 GPM	20°F

Hydronics/Water Flow (SC-3000 & SC-4000)

• The chart below represents the pressure drop (Ft of Head) versus the water flow rate (GPM) for the SONIC SC-3000 & SC-4000. This information is useful to help size an appropriate circulation pump. Keep in mind this pressure drop represents the boiler only, additional consideration is needed for any connected piping, valves, strainers, couplings, flanges, etc.

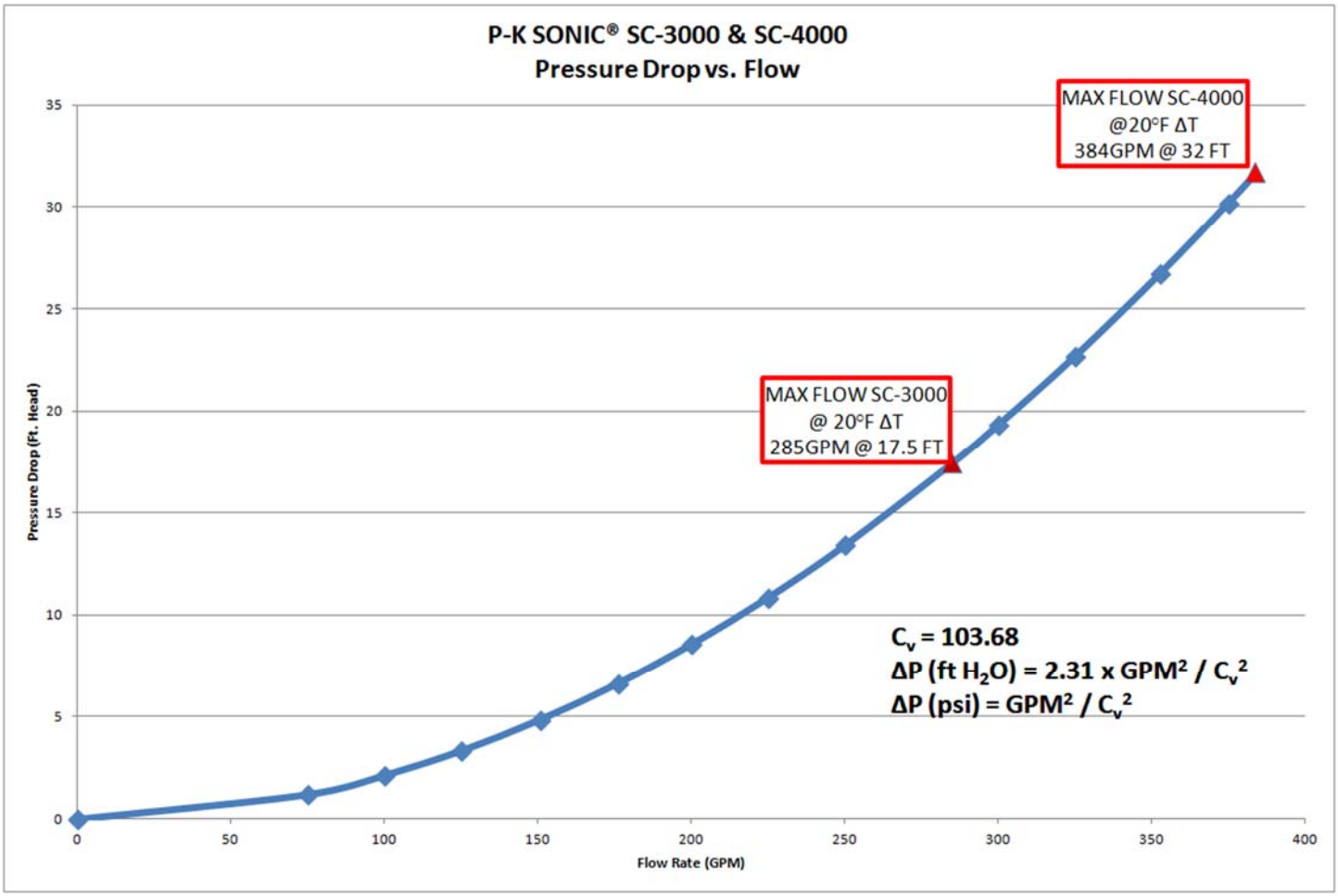

• The table below summarizes the minimum and maximum flow restrictions for the SC-3000:

Flow Condition	Boiler Operation	Flow Rate	Approximate ΔT
Maximum Flow	High Fire	285 GPM	20°F
Minimum Flow	Ignition	72 GPM	20°F
Minimum Flow	Low Fire	57 GPM	20°F

• The table below summarizes the minimum and maximum flow restrictions for the SC-4000:

Flow Condition	Boiler Operation	Flow Rate	Approximate ΔT
Maximum Flow	High Fire	384 GPM	20°F
Minimum Flow	Ignition	98 GPM	20°F
Minimum Flow	Low Fire	76 GPM	20°F

Table of Contents

1 Introduction **6**
2 Safety **8**
2.1 General 8
2.2 Safety Precautions 8
2.3 Training 9
2.4 Hazard Warnings 9
3 Installation **11**
3.1 Receiving and Storage 11
3.2 Compliance with Codes 11
3.3 Setup 12
3.4 Electrical Connections 13
3.5 Inlet Air and Exhaust Venting 17
3.6 Gas Piping 27
3.7 Boiler Water Piping 28
3.8 Pre-Start Checklist 30
3.9 Safety Checks 30
3.10 Initial NURO Control Setup & Adjustment 32
3.11 Fuel/Air Adjusment 34
4 Operations **36**
4.1 General 36
4.2 Normal Lighting and Shut-down Procedures 37
4.3 Emergency Shut-Off 37
4.4 Typical Boiler Operating Conditions 37
5 Maintenance **38**
5.1 Maintenance and Inspections Schedule 38
5.2 Cleaning the Burner & Combustion Chamber 39
5.3 After Repairs or Maintenance 40
5.4 Sequence of Operation 41
5.5 Troubleshooting 42
6 Parts/Tech Support **44**
6.1 Wiring Diagrams 44
6.2 Boiler Parts Identification (SC-2000) 55
6.3 Boiler Parts Identification (SC-3000 & SC-4000) 59
7 Warranty **65**
Boiler Fire-Test Report **66**
Appendix 1: Maintenance Log **67**
Appendix 2: Boiler Altitude Derate Sch. **68**
Appendix 3: Water Quality Standards **69**

WARNING: If the information in this manual is not followed, a fire or explosion may result causing property damage, personal injury or loss of life.

Do not store or use gasoline or other flammable vapors or liquids in the vicinity of this or any other appliance.

Installation and service must be performed by a qualified installer, service agency, or the gas supplier.

WHAT TO DO IF YOU SMELL GAS:

- **Do not try to light any appliance.**
- **Do not touch any electrical switch; do not use any phone in your building.**
- **Immediately call your gas supplier from a neighbor's phone. Follow the gas supplier's instructions.**
- **If you cannot reach your gas supplier, call the fire department.**

⚠ WARNING

It is essential to read, understand, and follow the recommendations of this manual before installing, operating or servicing this equipment. Failure to do so could result in personal injury or death.

⚠ WARNING

Installation and service must be performed by a qualified and knowledgeable individual who has been certified on the P-K Sonic™ Boiler. The features which permit this boiler to achieve high-efficiency performance can be misused which could result in personal injury or death.

1 INTRODUCTION

This manual describes the installation and operation of the following P-K SONIC™ boilers featuring NURO controls:

SC-2000:

- Natural Gas, 208-240V (single phase)
- Propane Gas, 208-240V (single phase)

SC-3000:

- Natural Gas, 240V (three phase)
- Natural Gas, 480V (three phase)
- Propane Gas, 240V (three phase)
- Propane Gas, 480V (three phase)

SC-4000:

- Natural Gas, 240V (three phase)
- Natural Gas, 480V (three phase)
- Propane Gas, 240V (three phase)
- Propane Gas, 480V (three phase)

If you have any questions on the information contained within, or do not fully and completely understand the content, please contact Harsco Industrial, Patterson-Kelley Technical Service at 570.476.7261 or toll free at 877.728.5351.

The P-K SONIC™ gas fired boilers are fully modulating using variable speed combustion blowers, sophisticated microprocessor controls, modulating gas safety shut off/control valves and a unique stainless steel heat exchanger capable of operating in a fully condensing mode to provide maximum efficiency in a minimum amount of space.

While specific details may differ slightly, basic operation is the same for all models. Check the rating plate for correct fuel usage and gas pressures.

The boiler is only a part of the complete heating system. This boiler may be fully operational and yet because of poor circulation, control, or other operating characteristics may not deliver heat to the desired location. Additional equipment such as temperature sensors, pumps, flow switches, balancing valves, and check valves will be required for satisfactory operation of any system. Harsco Industrial, Patterson-Kelley cannot be responsible for the design or operation of such systems and a qualified engineer or contractor must be consulted.

REVISION NOTES:

- **1/13/2015** – Revised flame signal information.
- **12/10/14** – Revised to include SC-2000 & NURO controls.
- **07/8/14 –** Edited text, made grammar corrections.

2 SAFETY

2.1 General

The SC-2000, SC-3000 and SC-4000 gas-fired boilers must be:

- Installed, operated, and serviced in accordance with instructions contained in this manual and other supplemental manuals.
- Installed by qualified personnel in accordance with designs prepared by qualified facility engineers including: structural, mechanical, electrical, and other applicable disciplines.
- Operated and serviced in accordance with a comprehensive safety program determined and established by the customer. Do not attempt to operate or service until such a program has been established.
- Operated and serviced by experienced, qualified, and properly trained personnel in accordance with all applicable codes, laws, and regulations.

2.2 Safety Precautions

Provide a suitable location for the boiler, away from normal personnel traffic, with adequate working space, adequate clearances, proper ventilation and lighting, with a structure sufficiently strong and rigid to support the weight of the boiler, all piping, and accessories.

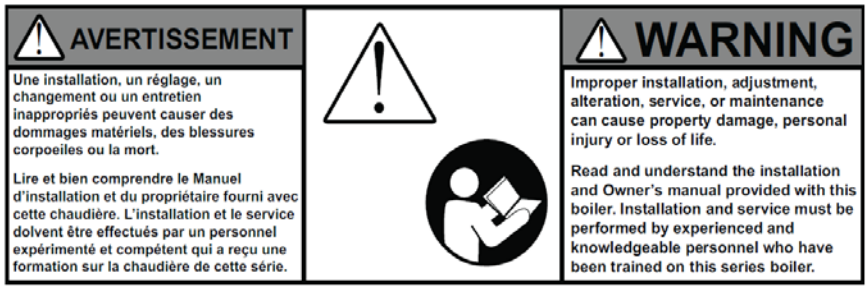

NOTICE!

Each safety device must be maintained and checked per the recommended schedule. Refer to *Section 5.1* of this manual.

Safety Features

It is the responsibility of the customer to ensure external safety provisions, such as but not limited to: guards, safety labels, safety controls, interlocks, lockout devices, are in place and operable.

Safety Labels

The following words are used in this manual to denote the degree of seriousness of the individual hazards.

DANGER

Indicates an imminently hazardous situation which, if not avoided, **will** result in death or serious injury. This signal word is to be limited to the most extreme situations.

WARNING

Indicates a potentially hazardous situation which, if not avoided, **could** result in death or serious injury.

CAUTION

Indicates a potentially hazardous situation which, if not avoided, **may** result in minor or moderate injury. It may also be used to alert against unsafe practices.

NOTICE/NOTE - NOTICE

Is the preferred signal word to address practices not related to personal injury. The safety alert symbol is not used with this signal word.

NOTICE!

The safety labels shown below are affixed to your boiler. Although the labels are of high quality, they may become dislodged or unreadable over time. Contact Harsco Industrial, Patterson-Kelley at 570.476.7261 or toll-free at 877.728.5351 for replacements.

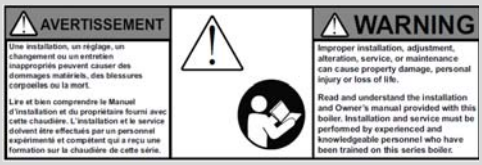

WARNING

Gas may lose its odor. Proper gas sensing equipment and procedures should be used for leak checks. Failure to detect gas leaks could result in injury or death.

2.3 Training

Proper training is the best protection against accidents. It is **essential** to read, understand, and follow the recommendations of this manual before installing, operating, or servicing this equipment. Failure to do so could result in fire or explosion and serious injury, death, and/or property damage.

Operating and service personnel must be thoroughly familiar with the basic construction of the SC-2000, SC-3000 and SC-4000 boilers, the use and locations of the controls, the operation of the boilers, adjustment of their various mechanisms, and all applicable safety precautions. If any of the provisions of this manual are not fully and completely understood, contact Harsco Industrial, Patterson-Kelley Technical Service at 570.476.7261 or toll free at 877.728.5351.

2.4 Hazard Warnings

2.4.1 Electrical Hazards

General Warning

Shock Hazard! Properly lockout/tagout the electrical service and all other energy sources before working on or near the boiler.

Shock Hazard! Do not spray water directly on this boiler or any electrical components.

Electrical Hazard! Do not alter wiring connections.

2.4.2 Crush Hazards

General Warning

Lifting Hazards! Use properly rated lifting equipment to lift and position the boiler. The load is unbalanced. Test the balance before lifting off the floor. Do not allow personnel beneath the lifted load. Refer to the approximate weights in the table.

Boiler Model	Weight in Pounds
SC-2000	1,450 lbs
SC-3000	1,850 lbs
SC-4000	1,900 lbs

2.4.3 Bump Hazard from Overhead Ductwork and Piping

General Warning

Injury Hazard! Install components with adequate vertical clearance.

2.4.4 Pressure Hazards

General Warning

Pressure Hazard! Hot fluids. Install isolation valves on boiler water inlet and outlet. Make sure isolation valves are closed before servicing boiler.

Pressure Hazard! Hot fluids. Annually test safety relief valve(s) for proper operation. Do not operate boiler with faulty relief valve(s).

2.4.5 Slip, Fall Hazards

General Warning

Tripping Hazard! Do not install piping on floor surfaces. Maintain a clear path around the boiler.

Slip and Fall Hazard! Use a drip pan to catch water while draining the boiler. Maintain dry floor surfaces.

Slip and Fall Hazard! Do not locate intake or exhaust terminations directly above a walkway; dripping of condensate can cause icing of the walking surface. Refer to *Section 3.5*.

Fall Hazard! Do not stand on boiler.

2.4.6 Chemical Hazards

General Warning

Chemical Hazards from Cleaning Products. Use caution when cleaning the system. The use of professional assistance is recommended. Use safe procedures for the disposal of all cleaning solutions.

Combustion Condensate – An acidic pH of approximately 3.0 to 5.0 can be expected. Use PVC, CPVC, or other corrosion resistant piping for drainage. Collection and disposal must be in accordance with all applicable regulations. A condensate neutralization kit is available. Please contact your local Harsco Industrial, Patterson-Kelley representative for more information.

2.4.7 Burn, Fire and Explosion Hazards

General Warning

Hot Surface

Burn, fire, and explosion hazards! Installation must be in strict conformance to all applicable codes and standards including NFPA 54, ANSI Z223.1 and CAN/CSA B.149. Install all required vent lines for gas devices. Refer to *Section 3.5*.

Hazard from Incorrect Fuels! Possible fire, explosion, overheating, and damage. Do not use any fuels except the design fuels for the unit.

Overfire Hazards! High pressure in gas supply could result in overfiring of this or other devices supplied from the same source.

Fire and Explosion Hazards! Close the main gas shutoff before servicing boiler.

Fire and Explosion Hazards! Do not store or use gasoline or other flammable vapors or liquids in the vicinity of this or any other gas fired appliance.

Burn hazard! Possible hot surfaces. Do not touch gas vent during firing operation. Use only factory recommended vent components.

Burn Hazard! Pipes, vents, and boiler components could be hot. Do not touch piping or stack surfaces during operation or immediately after shutdown of the boiler.

Burn Hazard! Hot flue! Use caution when servicing or draining boiler.

Fire and Explosion Hazards! Use caution when servicing burner. Propane (LPG) is heavier than air and may linger in the combustion chamber, vent lines, or elsewhere.

Gas Leak Hazard! Make sure the burner is installed correctly and blower/transition is securely fastened following any maintenance performed on them. These connections may leak gas if assembled incorrectly.

Gas Leak Hazard! All threaded gas connections must be made using a pipe compound that is resistant to liquefied petroleum gas. Do not use Teflon™ tape on threaded gas piping.

Gas Leak Hazard! Check entire gas train for leaks after installation. If there is a smell of gas, shut down the boiler and obtain immediate assistance from trained service personnel and/or your local fire department.

Overfire Hazard! Possible fire and explosion from excess gas pressure. Make sure that gas inlet pressure does not exceed 14 inches w.c.

Overfire Hazard! Possible fire and explosion. Possible malfunction of regulators and/or gas safety shut off/control valves. Maintain all gas train components in good condition. Do not alter wiring connections. Annual inspection by factory-trained personnel for proper set-up and operation is recommended.

Overfire and Underfire Hazards! Possible fire, explosion, overheating, and component failure. Do not attempt to adjust firing rate of the boiler. The firing rate must be adjusted only by factory trained personnel.

WARNING

Installation and service must be performed by a qualified installer, service agency, or gas supplier. Failure to install the equipment in accordance with this manual could result in an unsafe operating condition.

NOTICE!

Controls and other equipment that are damaged or fail due to weather exposure are not covered by warranty.

WARNING

The wheels provided with this boiler are for positioning purposes only. When positioning this boiler, maintain positive control of it at all times. Do not attempt to move the boiler on surfaces that are not level. Failure to heed this warning could result in personal injury or death.

NOTICE!

The boiler may be installed on a combustible floor; however, the boiler must never be installed on carpeting.

WARNING

Bumping hazard from overhead ducts! Install all components with adequate vertical clearances. Insufficient clearance can restrict the service access, increasing the possibility of injury.

3 INSTALLATION

3.1 Receiving and Storage

3.1.1 Initial Inspection

Upon receiving the boiler, inspect it for signs of shipping damage. Some damage may be hidden. Unpack the boiler, open the front and side doors and inspect the boiler. Verify that the total number of pieces shown on the packing slip agrees with those actually received.

3.1.2 Storage Prior to Installation

If the boiler is not installed immediately, it must be stored in a location adequately protected from the weather, preferably indoors. If this is not possible, then it should remain in the shipping container and be covered by a tarpaulin or other waterproof covering.

3.2 Compliance with Codes

The boiler with standard components and with many options complies with American National Standard/CSA Standard ANSI Z21.13/CSA 4.9, latest edition, Gas-Fired Low Pressure Steam and Hot Water Boilers.

The SC-2000 heat exchanger is constructed and stamped in accordance with ASME Boiler and Pressure Vessel Code, Section IV (160 psig maximum operating pressure).

The SC-3000 and SC-4000 contain two separate heat exchangers constructed and stamped in accordance with ASME Boiler and Pressure Vessel Code, Section IV, and Section VIII – Division 1 (160 psig maximum operation pressure).

Installation of the boiler must conform to all the requirements of all national, state and local codes established by the authorities having jurisdiction or, in the absence of such requirements, to the National Fuel Gas Code, ANSI Z223.1/NFPA 54 latest edition in the U.S. In Canada, the equipment shall be installed in accordance with the current Installation Code for Gas Burning Appliances and Equipment, CAN/CSA-B.149, latest edition, and applicable Provincial Regulations for the class, which should be carefully followed in all cases. Authorities having jurisdiction should be consulted before making any installation.

Where required by local codes, the installation must conform to American Society of Mechanical Engineers Safety Code for Controls and Safety Devices for Automatically Fired Boilers (ASME CSD-1).

In the Commonwealth of Massachusetts (a) this unit must be installed by a licensed pipe fitter/plumber, (b) field installed gas cocks must be “T” handle type, (c) piping of condensate shall conform to the State Plumbing Code, and (d) refer to the Massachusetts Supplement for further details.

3.3 Setup

3.3.1 Foundation

Provide a firm, level foundation, preferably of concrete. Lifting the front of the boiler slightly will allow the boiler to be rolled off the shipping skid onto the concrete foundation. Once in position, the wheel bolts may be removed allowing the wheels to recess up into the boiler. The base will sit flat on the provided foundation. If the boiler is to be pulled out for maintenance, the wheels may be left attached.

3.3.2 Placement

The boiler must be level to function properly. Six 9/16” holes in the base may be used for 3/8” anchor bolts.

3.3.3 Clearances

If the boiler is to be installed near combustible surfaces, the minimum clearances shown in ***Table 3.3.3*** and ***Figure 3.3.3.*** must be maintained. Failure to provide for the service access clearances, even with non-combustible surfaces, may cause future problems servicing the boiler. Maintain a clearance from the vent to combustible surfaces of 24” or as specified in the vent manufacturer’s listed installation instructions. The boiler must be installed in a space large enough in comparison to the boiler as described in the National Fuel Gas Code, ANSI Z223.1, latest edition.

Table 3.3.3

Type of Surface	Dimensions (inches)			
	A	B	C	D
Combustible Surfaces Minimum Clearances	30	12*	24†	12**
Recommended Clearances for Service Access	30	12*	24†	12**

Figure 3.3.3

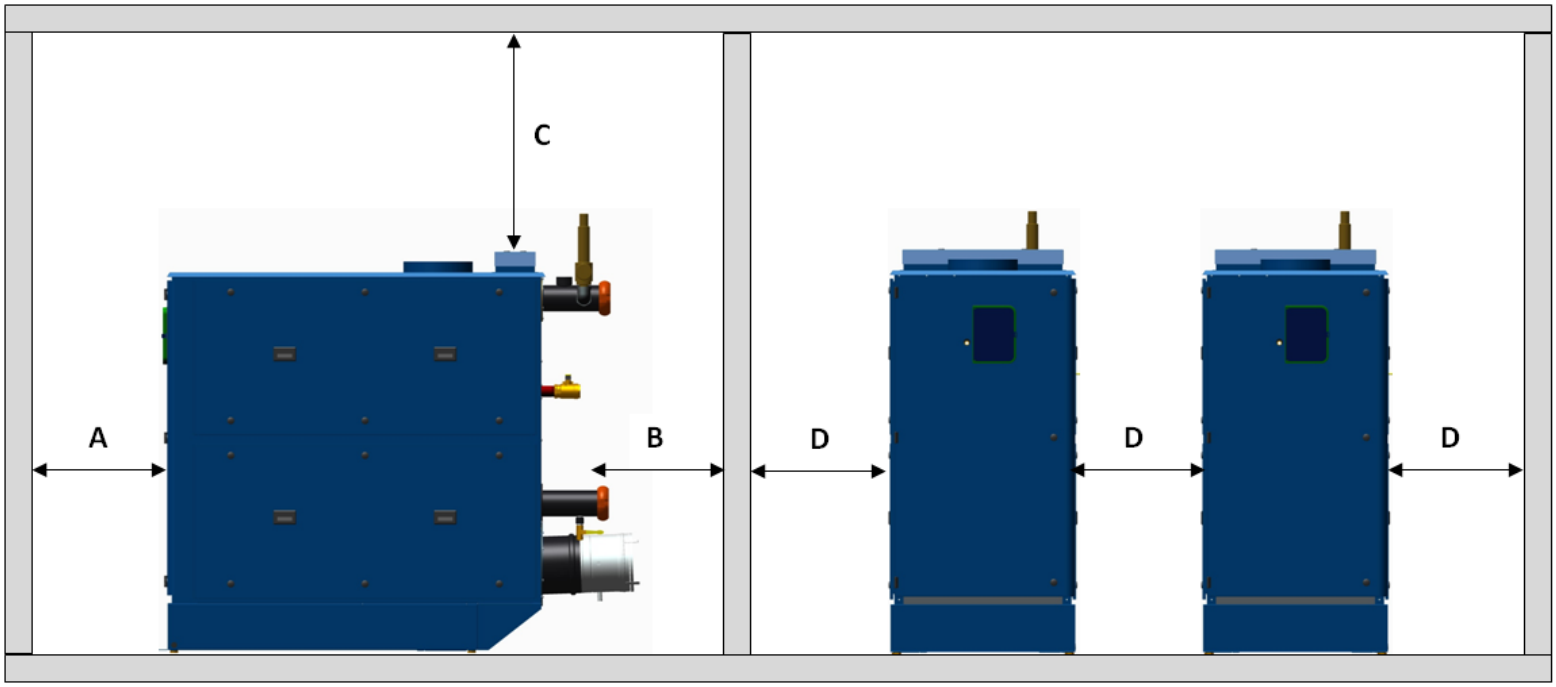

* “B” Clearance depends upon exhaust vent configuration.
† “C” Space required for pipes, ducts, etc. in this area above the boiler.
** Do not put pipes, ducts, vents, etc in this space. Electrical conduit must be installed vertically so that the side doors can be opened.
NOTE: Annual maintenance items can be accessed from the front of the boiler.

3.4 Electrical Connections

The SC-2000 boiler requires 208-240 VAC, single phase, 60 hertz electrical service. The total operating amperage is indicated on the rating nameplate and the SC-2000 requires less than 15 Amps at full load. Before starting the boiler, check to ensure that the proper electrical service is connected to the boiler.

The SC-3000 and SC-4000 boilers can be manufactured for 208-240 VAC, three phase, 60 hertz electrical service **OR** 440-480VAC, three phase, 60 hertz electrical service. The total operating amperage is indicated on the rating nameplate and the SC-3000 & SC-4000 boilers require less than 20 Amps at full load. Before starting the boiler, check to ensure that the proper electrical service is connected to the boiler.

> **NOTE:** The SC-3000 & SC-4000 **MUST** be ordered to the correct voltage! **IT IS NOT POSSIBLE** to convert an SC-3000 or SC-4000 between the 240V and 480V configurations in the field.

An external electrical disconnect (not supplied with the boiler) **is required**. Refer to *Section 6.1* for proper wiring and configuration of the electrical connections. The boiler electrical service must be installed and grounded in accordance with local codes or in the absence of such requirements, in the U.S. with National Electrical Codes, ANSI/NFPA No. 70 latest edition or, in Canada, to the Canadian Electrical Code, Part I, CSA C22.1, latest edition. Installed conduit must not block any of the boiler's openings and must allow the side doors to be opened.

3.4.1 Single Phase Power Supply Connection (SC-2000 Only)

High Voltage (TB2) Terminal Block

The SC-2000 must be supplied with 208-240VAC, single phase, 60 hertz electrical service. The SC-2000 features four dedicated power terminals on the **High Voltage (TB2)** terminal block. ***Figure 3.4.1*** shows the Low Voltage (TB1) and **High Voltage (TB2)** terminal blocks on the SC-2000 with the front door hidden for clarity:

- TB2 Terminal 1 = HOT L1
- TB2 Terminal 2 = HOT L2
- TB2 Terminal 3 = NEUTRAL
- TB2 Terminal 4 = GROUND

> **NOTE:** These terminals can accommodate maximum 10AWG wire.
>
> **CAUTION:** Do not over-tighten the terminal screws. Maximum tightening torque = 6 in-lbs!

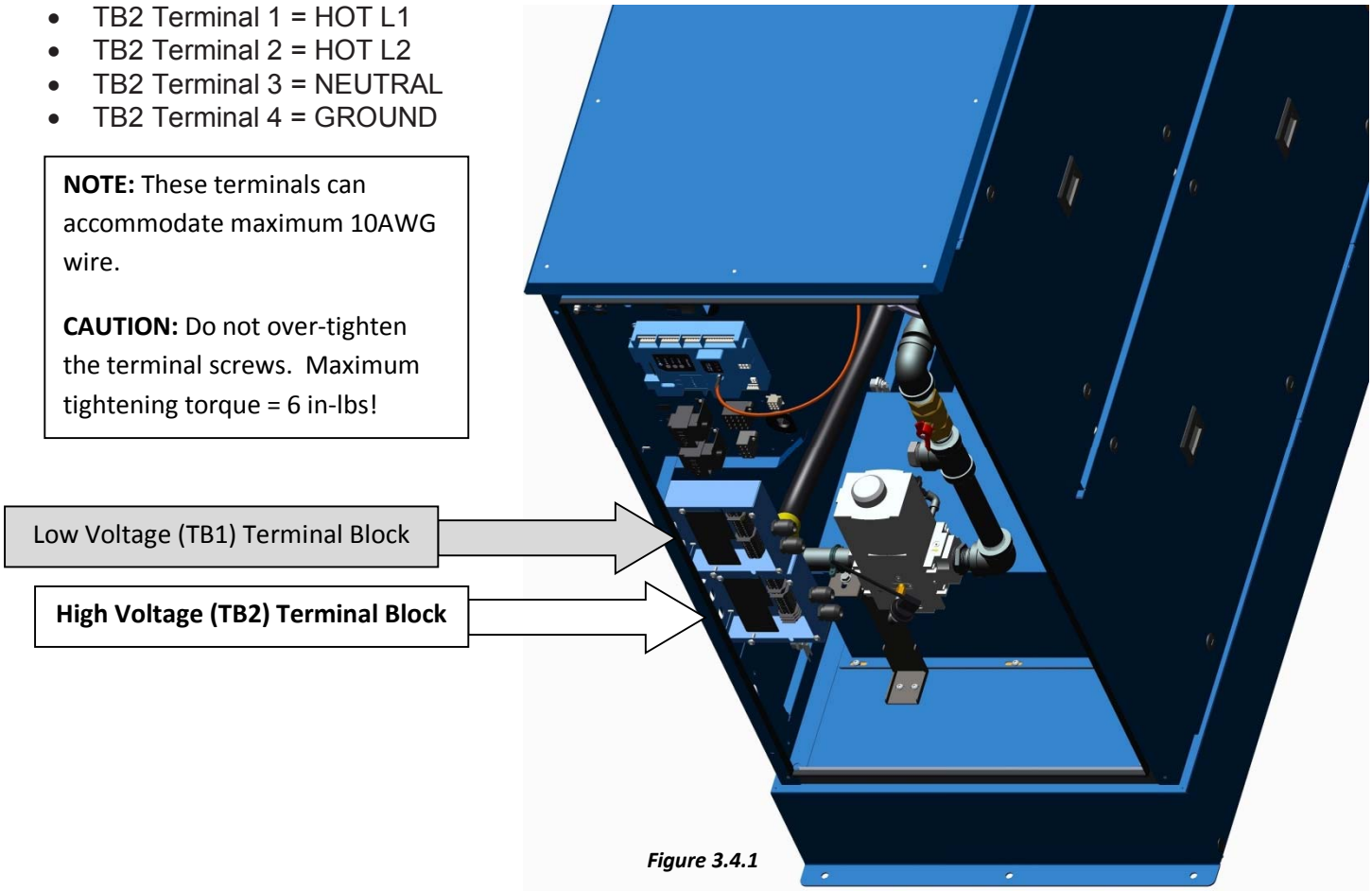

Figure 3.4.1

3.4.2 Three Phase Power Supply Connection (SC-3000 & SC-4000 Only)

Main Power Connection Box

Check the rating nameplate of the SC-3000 or SC-4000 boiler to determine the required electrical service:

- 208-240VAC, three phase, 60 hertz
- 440-480VAC, three phase, 60 hertz

The incoming three phase power for the SC-3000 & SC-4000 boilers is connected to the over-current safety device (rated for 20 Amps) and the Ground terminal located in the main power connection box. ***Figure 3.4.2*** shows the Low Voltage (TB1) and High Voltage (TB2) terminal blocks, plus the **Main Power Connection Box** on the SC-3000 & SC-4000 with the front door hidden for clarity:

- Terminal 1 = HOT L1
- Terminal 3 = HOT L2
- Terminal 5 = HOT L3
- Terminal G = GROUND

The **Main Power Connection Box** features a **Control Transformer** which steps down two hot leads from the incoming three-phase power in order to supply 110-120VAC single phase power to the boiler's control system. Be aware that SC-3000 & SC-4000 boilers ordered in the 240V configuration, are pre-wired from the factory for operation with 240 VAC three phase incoming power.

If 208 VAC three phase power is supplied to the boiler, the internal control transformer **must be re-wired** for operation at this lower voltage. The wire in terminal X3 on the load side of the internal control transformer must be moved to terminal X4. This supplies the 120 VAC power to the controls from the 208 VAC main voltage. Refer to *Section 6.1.4* for proper wiring and configuration of the internal control transformer.

NOTE: The hot lead terminals can accommodate maximum 12AWG wire. The ground terminal can accommodate maximum 8 AWG wire.

CAUTION: Do not over-tighten the hot lead terminal screws. Maximum tightening torque = 13 in-lbs!

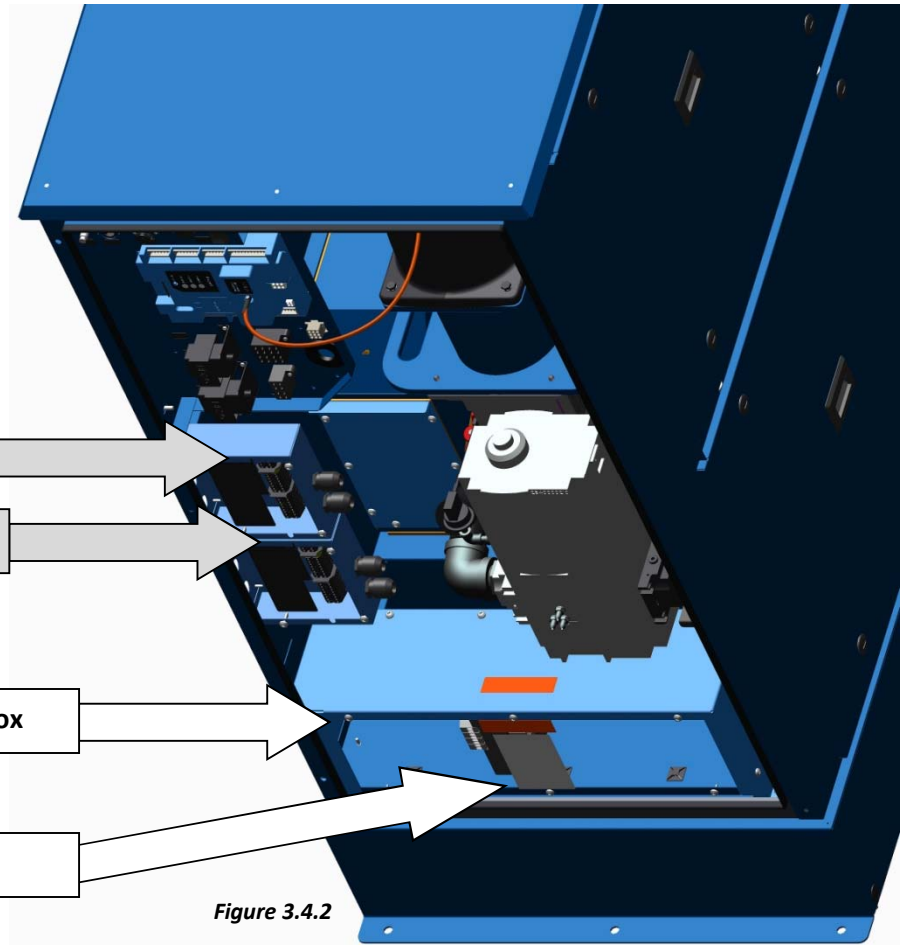

Figure 3.4.2

⚠ CAUTION

Be sure to check the nameplate on the boiler before connecting the electrical supply.

NOTICE!

A dedicated earth ground (green wire) is required to avoid nuisance shutdowns. Do not ground through the conduit!

⚠ WARNING

The high voltage (TB2) terminal block on the SONIC SC-2000 with NURO controls contains two hot leads (HOT L1 & HOT L2), a neutral lead (NEUTRAL) and a ground lead (GROUND) for 208- 240 VAC, single phase 60Hz electrical supply. This terminal block (TB2) also contains dry-contact relays with a maximum voltage rating of 240VAC and 1/2 Amp maximum current capacity. Incorrect wiring can result in equipment damage, injury or death.

⚠ WARNING

The high voltage (TB2) terminal block on the SONIC SC-3000 & SC-4000 with NURO controls contains dry-contact relays with a maximum voltage rating of 240VAC and 1/2 Amp maximum current capacity. Incorrect wiring can result in equipment damage, injury or death.

3.4.2 High Voltage (TB2) Terminal Block

Start Interlock #1 – The Start Interlock #1 terminals can be used for auxiliary safety devices such as damper end limit switches, control valve end limit switches, emergency stop buttons, and low water cutoff devices. This circuit is energized with 120VAC, so the contacts on any auxiliary safety devices must be rated for a minimum of 120VAC.

Start Interlock #2 – The Start Interlock #2 terminals are in series with Start Interlock #1 and provide additional connection points for auxiliary safety devices. This circuit is energized with 120VAC, so the contacts on any auxiliary safety devices must be rated for minimum 120VAC.

The boiler ships with a factory-installed jumper across Start Interlock #1 and Start Interlock #2 terminals. Remove the jumper(s) if using any auxiliary safety devices.

NOTE: Both the Start Interlock #1 and Start Interlock #2 circuits must close within 5 minutes of a call for heat. Failure to close the Start Interlock circuit will cause the boiler to lockout on alarm.

Auxiliary Input #1 – These terminals are reserved for future use. This circuit is energized with 120VAC.

Auxiliary Input #2 – These terminals are reserved for future use. This circuit is energized with 120VAC.

Air Damper Interlock – The Air Damper Interlock provides dedicated terminals for proof of open end limit switch on a motorized air damper. This circuit is energized with 120VAC, so the contacts on the end limit switch must be rated for minimum 120VAC.

The boiler ships with a factory-installed jumper across the Air Damper Interlock terminals. Remove the jumper if connecting a motorized air damper with end limit switch.

Relay A – User-configurable relay output #1. The normally-open contacts on this relay have a maximum voltage rating of 240VAC and maximum current capacity of 1/2 Amp.

Relay B – User-configurable relay output #2. The normally-open contacts on this relay have a maximum voltage rating of 240VAC and maximum current capacity of 1/2 Amp.

Relay C – User-configurable relay output #3. The normally-open contacts on this relay have a maximum voltage rating of 240VAC and maximum current capacity of 1/2 Amp.

Relay D – User-configurable relay output #4. The normally-open contacts on this relay have a maximum voltage rating of 240VAC and maximum current capacity of 1/2 Amp.

NOTE: Relays A thru D can be user-configured through the NURO touch screen interface to control devices such the Comfort Heat (CH) Pump, Domestic Hot Water (DHW) Pump, Air Damper, System Pump, etc.

Master Alarm Relay – The Master Alarm Relay terminals are normally-open dry contacts that close in the event of an alarm output from the boiler control.

Refer to *Section 6.1* for proper wiring and configuration of the electrical connections.

3.4.3 Low Voltage (TB1) Terminal Block

Enable/Disable –TB1-1 and TB1-2 can be used to remotely enable or disable the boiler. The functionality of these terminals is user-configurable through the NURO controls, but generally closure of the Enable/Disable circuit provides a call for heat to the boiler. Opening this circuit prevents the boiler from running.

The boiler ships with a factory-installed jumper across the Enable/Disable terminals. This circuit is energized with a 24VAC potential, so the contacts on any remote enable devices must be rated for minimum 24VAC.

4-20mA Analog Input – TB1-3 and TB1-4 can be used to provide a remote analog 4-20mA control signal to the boiler. This analog signal can be used to change the boiler's operating setpoint or firing rate.

Spare Analog Input – TB1-5 and TB1-6 are reserved for future use.

HDR Temp Sensor – TB1-7 and TB1-8 can be used to connect a remote header temperature sensor, installed in the primary hydronic system piping, downstream of all the boilers. This temperature sensor must be a 2-wire 12kΩ NTC thermistor. This circuit is energized by the boiler with a 5VDC potential.

DHW Stat/Sensor – TB1-9 and TB1-10 can be used to connect either an aquastat or remote DHW temperature sensor installed in a domestic hot water storage tank. If using an aquastat, use a SPST normally-closed, break on rise type with either a fixed or adjustable deadband above and below the setpoint.

Alternatively, if using a temperature sensor, it must be a 2-wire 12kΩ NTC thermistor and be of sufficient length to measure an accurate storage tank temperature. This circuit is energized by the boiler with a 5VDC potential.

Outdoor Temp Sensor – TB1-11 and TB1-12 can be used to connect an outdoor air temperature sensor which allows the NURO control to be programmed to run an outdoor air schedule. The outdoor air temperature sensor must be a 2-wire 12kΩ NTC thermistor and should be installed on the North face of the building and shielded from direct sunlight exposure. This circuit is energized by the boiler with a 5VDC potential.

Night Setback – TB1-13 and TB1-14 can be used to connect a day/night or occupancy timer. Closure of the Night Setback circuit enables the Night Setback mode which reduces the boiler's operating setpoint. Opening this circuit resumes normal operation. This circuit is energized by the boiler with a 5VDC potential, so the contacts on the day/night timer must be rated for minimum 5VDC.

4-20mA Analog Output – TB1-15 and TB1-16 provide a 4-20mA analog output signal which tracks the boiler's firing rate. When operating at full power (maximum firing rate), the boiler will provide a 20mA output. When operating at mimimum power (minimum firing rate), the boiler will provide a 4mA output.

Ground – TB1-17 provides an equipment (frame) ground connection for input, output, or communication connections. For independently powered control devices, it may be necessary to create a common ground.

Cascade Shield & Cascade – TB1-18, TB1-19 and TB1-20 can be used to setup a cascade system with multiple SONIC boilers with NURO controls. Terminals TB1-19 and TB1-20 are reserved for the cascade communication between the master and member boilers. Terminal TB1-18 should be used to connect the cascade communication wiring shield between all boilers. The cascade and shielding must be wired from the master boiler to each individual member boiler in a daisy-chain fashion. **NOTE**: Only ground the shield at the master boiler.

MODBUS COM & MODBUS Shield – TB1-22, TB1-23 and TB1-24 can be used to integrate the boiler with a Building Management System (BMS), Protocol Converter, or other device capable of RS-485 2-wire MODBUS communication. Terminals TB1-22 and TB1-23 are reserved for MODBUS and terminal TB1-18 provides a connection for the MODDBUS communication wire shield. **NOTE**: Only ground the shield at the master boiler.

ECOM 1, 2 & 3 – TB1-25, TB1-26 and TB1-27 can be used to connect a wireless outdoor air temperature sensor. The wireless receiver should be installed at or near the boiler, and the wireless temperature sensor should be installed on the North face of the building and shielded from direct sunlight exposure.

Refer to *Section 6.1* for proper wiring and configuration of the electrical connections.

WARNING

Design and installation of venting systems should be done only be qualified and knowledgeable venting systems personnel and in accordance with vent system manufacturer's installation instructions. Installing a boiler or vent system using improper installation methods or materials can result in serious injury or death due to fire or asphyxiation.

WARNING

Before connecting a boiler to a venting system, it must be determined whether the boiler is to be installed in a conventional or direct vent configuration. In the US, provisions for combustion air must be in accordance with NFPA 54/ANSI Z223.1, National Fuel Gas Code, latest edition, or applicable provisions of the local building codes. In Canada, combustion and ventilation air openings shall comply with CAN/CSA B-149.1 Natural Gas and Propane Installation Code.

WARNING

For correct installation of vent system, read all of these instructions and refer to vent manufacturer's instructions.

Failure to use a proper vent system (types and materials), as described in this manual will void the boiler warranty and may result in rapid deterioration of the venting system, creating a health or life safety hazard.

Faulty vent installation can allow toxic fumes to be released into living areas. This may cause property damage, injury or death.

3.5 Inlet Air and Exhaust Venting

3.5.1 Applicable Codes and Standards

Codes

United States:

NFPA 54/ANSI Z223.1	National Fuel Gas Code
NFPA/ANSI 211	Chimneys, Fireplaces, Vents and Solid Fuel Burning Appliances

Canada:

CAN/CSA B149.1	Installation Codes for Gas Burning Equipment

Standards

UL 1738	Venting Systems for Gas-Burning Appliances, Categories II, III and IV
ULC S636-95	Standard for Type BH Venting System Sheet Metal and Thermoplastic Duct Construction Manual Air Conditioning Contractors National Association (SMACNA)

These codes and standards contain information for the venting of gas fired appliances, including, but not limited to vent sizing, location, clearance to combustibles, and safe installation practices. The installation must comply with both the above Federal Codes and with state, provincial and local codes.

Table 3.5.1
Required Stainless Steel Vent Adapters and Category II Motorized Dampers

Boiler Size	Nom. vent Size	Stainless Vent Adapter	Vent adapter size	Boiler Combustion Air inlet	Combustion air N.C. Motorized Damper	Size
SC-2000	10"	2640000133	10"	12"	1004906946	12"
SC-3000	10"	2640000133	10"	12"	1004906946	12"
SC-4000	10"	2640000133	10"	12"	1004906989	14"

NOTE: This table is for information only. Combustion air dampers and vent adapters are listed for use of design and may or may not be specific to your application.

A normally-closed motorized combustion air damper with end limit switch is required for Category II vent installations, and is optional for Category IV vent installations. 120VAC motorized dampers with end limit switches are available for purchase from Harsco Industrial, Patterson-Kelley. Other damper motor voltages are acceptable, provided they do not exceed 240VAC. The Air Damper Interlock circuit for the end limit switch is always 120VAC which is sourced from the boiler itself. All end limit switches must be rated for a minimum 120VAC.

Motorized dampers must be powered from an external power supply other than the boiler. ***Figure 3.5.1*** shows a sample installation in which Relay C is user-selected to operate a 120VAC motorized air damper. Relay C is normally-open, so when the boiler is in standby, the combustion air damper remains closed. Once a call for heat is received, Relay C closes the 120VAC circuit (external power supply) which provides power to the damper motor, opening the damper.

Once the motorized damper is fully-open, its end limit switch completes the Air Damper Interlock circuit (120VAC) which allows the boiler to proceed to ignition.

NOTICE!
Relay A, Relay B and Relay C are rated for a maximum voltage of 240VAC and a maximum current capacity of 1/2 Amp. Connecting a motorized damper which exceeds the voltage or current capacity of the relay could cause permanent damage to the relay.

NOTE: The NURO control allows the user to allocate Relay A, B or C for use with a motorized combustion air damper. ***Figure 3.5.1*** shows Relay C in use for the motorized combustion air damper. Depending on the user-configuration, Relay A, Relay B, or Relay C can be selected to operate the combustion air damper.

Figure 3.5.1

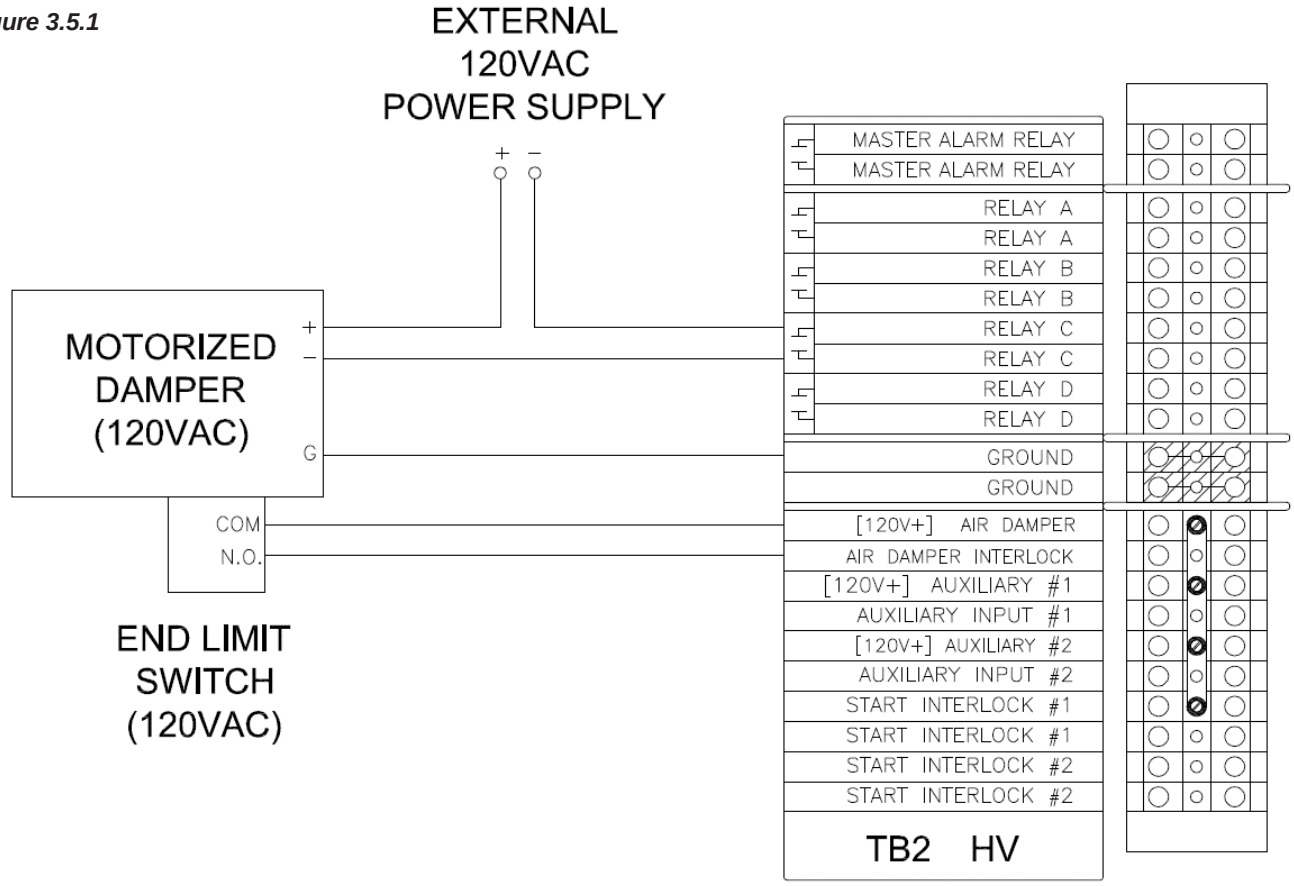

⚠ WARNING

External power supplies are required for Relay A, Relay B and Relay C. Because power is provided from an external source, the power is still present when the boiler is turned off. Check all voltage sources have been disconnected prior to servicing. Failure to do so could result in electrocution, injury, or death.

3.5.1.1 Gas Vent Categories

Several codes and standards have categorized appliances in accordance with the flue gas temperature and pressure produced by the appliance. The applicable categories are defined as follows:

- **Category II:** An appliance that operates with a non-positive vent static pressure and with a vent temperature that may cause excessive condensate production in the vent.
- **Category IV:** An appliance that operates with a positive vent static pressure and with a vent temperature that may cause excessive condensate production in the vent.
- **Direct Vent:** An appliance that is constructed and installed so that all air for combustion is derived directly from outdoors and all flue gases are discharged to the outdoors.

3.5.1.2 Venting Materials for Flue/Exhaust Systems

The P-K SONIC™ boilers are dual certified as a Category II and Category IV appliances, which vents with a temperature that is likely to cause condensation in the vent. Therefore, any venting system used with the P-K SONIC™ boiler must comply with the requirements for either Category II or Category IV venting systems as specified in the latest edition of NFPA 54/ANSI Z223.1 in the US or the latest edition of CAN/CSA B-149.1 in Canada.

CPVC Venting

US: CPVC pipe conforming to ASTM F441. Sch 80 fittings conforming to ASTM F439. Joints are to be sealed with solvent conforming ASTM 493.

Canada: CPVC Pipe, Fitting and Sealant listed and labeled to ULC S-636 Standard for Type BH Venting Systems.

Polypropylene Venting

US and Canada: Polypropylene such as InnoFlue from Centrotherm or PolyPro from DuraVent or other listed manufacturers. When used, the same manufacturer's material must be used throughout the system. It is not permissible to use material from different manufacturers within the same system.

As per ANSI Z21.13b-2012 * CSA 4.9b-2012:

- **The use of cellular core PVC, CPVC and Radel as venting materials is prohibited.**
- **The use of external insulation on plastic vent pipe is prohibited.**

WARNING

The venting materials listed are intended for the venting of gas burning appliances only. Do not use these venting materials for venting liquid or solid fuel (such as oil, kerosene, wood or coal) appliances.

Maintain clearances to combustibles as listed in the vent manufacturer's installation instructions or as set forth in the codes and standards listed in this section.

Do not use these vent pipes for incinerators of any sort!

This boiler is not certified for use with PVC venting. Use of PVC venting may result in vent failure and possible serious injury or death.

Acceptable Venting Materials

Table 3.5.1.2

Model	Country	AL29-4C	316L SS	PVC	CPVC	POLYPROPYLENE
SC-2000	US	Yes	Yes	No	Yes	Note 2
SC-3000	US	Yes	Yes	No	Yes	Note 2
SC-4000	US	Yes	Yes	No	Yes	Note 2
SC-2000	Canada	Yes	Yes	No	Note 1	Note 1
SC-3000	Canada	Yes	Yes	No	Note 1	Note 1
SC-4000	Canada	Yes	Yes	No	Note 1	Note 1

Note 1: When this material is used for venting, it must be listed to ULC-S636.

Note 2: When this material is used for venting, it must be listed to UL-1738.

3.5.2 Combustion Air Materials and Sizes

The air intake duct can be fabricated from PVC, CPVC, single wall galvanized steel, or other suitable materials. The duct must be rigid enough to maintain the full required cross sectional area under all operating conditions. Proper sealing of the intake ductwork is necessary to prevent infiltration of air from conditioned space. Joints in PVC or CPVC must be cemented. For galvanized duct, wrap each joint and seam with adhesive aluminum tape or other sealant. The installation of a bird screen on the intake termination is recommended. Ensure that the screen does not become blocked with snow, ice, insects etc. Combustion air duct should be designed with maximum 0.22” w.c. friction loss.

Combustion air must be free from dust, lint, etc. The presence of such materials in the air supplied to the burner could cause nuisance "Low Air" shutdowns or premature burner failure. The boiler should not be operated during construction while the possibility of drywall dust, demolition dust, etc. exists.

The combustion air supply must be completely free of chemical fumes which may be corrosive when burned in the boiler. Common chemicals which must be avoided are fluorocarbons and other halogenated compounds, most commonly present as refrigerants or solvents, such as Freon®, trichloroethylene, perchloroethylene, chlorine, etc. These chemicals, when burned, form acids which quickly attack the boiler and the boiler stack. The result is improper combustion and premature boiler failure.

Refer to ***Table 3.5.2*** below which summarizes the combustion air requirements for the SONIC boilers. Ensure the combustion air piping is of sufficient size (and acceptable equivalent length) in order to carry the required SCFM with a maximum friction loss of 0.22” w.c.

Table 3.5.2

P-K SONIC™ Boiler Model	Required SCFM
SC-2000	420
SC-3000	629
SC-4000	839

Acceptable Materials for Venting Systems

ManufacturedVentingSystems

US and Canada:

AL29-4C Stainless Steel Vent Systems listed and labeled to UL1738 Venting Systems for Gas-Burning Appliances, Categories II, III, and IV

316L Stainless Steel where certified and warranted by the vent manufacturer for venting of Category II, III, or IV appliances

3.5.2.1 Air Inlet Requirements — United States (NFPA 54/ANSI Z223.1 & NFPA/ANSI 211)

WARNING

Under no circumstances shall the boiler room ever be under a negative pressure. Particular care should be taken when exhaust fans, compressors, air-handling units or other equipment may rob air from the boiler. Note that this equipment might be in rooms other than the boiler room. This applies to both sealed combustion and atmospheric room combustion air applications.

NOTE:

1. The required size of openings for combustion and ventilation air shall be based on the net free area of the opening.
2. Screens shall be not smaller than ¼".
3. Motorized louvers shall be interlocked with the appliance so that they are proven open prior to main burner ignition and operation.

When air is supplied from inside the building, the total required volume shall be the sum of the required volume for all the appliances located in the mechanical room. Adjacent rooms furnished with fixed openings communicating directly with the mechanical room are considered part of the required volume. The minimum volume is 50 ft^3 per 1000 Btu/hr (4.8 m^3/kW) of installed appliance input capacity.

Openings used to connect indoor spaces to obtain the required minimum volume shall be sized as follows:

- When rooms are on the same floor, each opening shall have an area equal to 1 square inch for each 1000 Btu/hr (2200 mm^2/kW) of installed appliance input capacity, but not less than 100 square inches. One opening should commence less than 12 inches above the floor and the other less than 12 inches below the ceiling. The minimum dimension of air openings shall be 3 inches.
- When rooms are on different floors, each opening shall have an area equal to 2 square inches for each 1000 Btu/hr (4400 mm^2/kW) of installed appliance input capacity.

When combustion air is supplied from outside the building, the boiler room shall be provided with one or two openings to ensure adequate combustion air and proper ventilation.

When using one permanent opening, the opening shall commence within 12 inches of the ceiling and shall communicate directly with the outdoors or through a vertical or horizontal duct that communicates to the outdoors.

Minimum free area of the opening is 1 square inch for each 3000 Btu/hr (700 mm^2/kW) of installed appliance input capacity, and not less than the sum of the areas of all vent connectors in the room.

When using two permanent openings, one opening shall commence within 12 inches above the floor and the other within 12 inches below the ceiling, preferably on opposite walls. The openings shall communicate directly, or by way of ducts, with free outdoor air. The minimum net free area of the openings shall be calculated in accordance with the following:

- When air is taken directly from outside the building, each opening (minimum of two, as outlined above), 1 square inch for each 4,000 Btu per hour (550 mm^2/kW) of total boiler input is required.
- When air is taken from the outdoors through a vertical duct into the mechanical room, 1 square inch per 4,000 Btu per hour (550 mm^2/kW) of total boiler input is required.
- When air is taken from the outdoors through a horizontal duct into the mechanical room, 1 square inch per 2,000 Btu per hour (1100 mm^2/kW) of total boiler input is required.

Table 3.5.2.1 US Minimum area of ventilation openings per boiler (sq inches)

P-K SONIC™ Boiler Model	AIR SOURCE					
	INDOOR AIR SUPPLY		OUTDOOR AIR SUPPLY			
	SAME FLOOR	DIFF FLOORS	ONE OPENING	TWO OPENINGS		
				DIRECT	VERT DUCT	HORIZ DUCT
SC-2000	2000	4000	667	500	500	1000
SC-3000	3000	6000	1000	750	750	1500
SC-4000	4000	8000	1334	1000	1000	2000

3.5.2.2 Air Inlet Requirements – Canada (CAN/CSA B149.1)

A. Ventilation of the space occupied by fuel burning appliance(s) or equipment shall be supplied by a ventilation opening at the highest practicable point communicating with the outdoors. The total cross sectional area of the ventilation opening must be either 10% of the net free area required for combustion air or 10 sq. in. (6500 mm^2), whichever is greater.

B. Use the following opening calculation for P-K SONIC™ boilers:

When combustion air is supplied for a forced draft burner by natural airflow from the outdoors and there is no draft regulator or draft hood in the same space, there shall be a permanent opening with a cross sectional area not less than 1 sq. in/30,000 Btu/Hr (70 mm^2/kW) of the total rated input to the burner(s). This opening must not interfere with the ventilation air opening defined in paragraph A.

C. Use the following opening calculation for P-K THERMIFIC® boilers or other natural draft or fan-assist appliances:

When combustion air is supplied for natural or fan-assisted burners by natural airflow from the outdoors, there shall be a permanent opening with a cross sectional area not less than 1 sq. in/7000 Btu/Hr (321 mm^2/kW) up to and including 1,000,000 Btu/Hr plus 1 sq. in./14,000 Btu/Hr (155 mm^2/kW) in excess of 1,000,000 Btu/Hr. This opening must be either located at or ducted to a point not more than 18 in. (450 mm) or less than 6 in. (150 mm) above floor level. This opening is in addition to the ventilation air opening defined in paragraph A.

NOTE:

1. The free area of a combustion air supply opening is calculated by deducting the blockage area of any fixed louvers, grilles or screens from the total area of the opening.
2. Screens shall be not smaller than ¼".
3. Motorized louvers shall be interlocked with the appliance so that they are proven open prior to main burner ignition and operation.

D. When combustion air is supplied by natural airflow into a space containing both types of appliance described in paragraphs B and C, the cross sectional area of the opening shall not be less than the sum of the cross sectional areas for all appliances in the space as calculated by the applicable method. This opening is in addition to the ventilation air opening defined in paragraph A.

E. When a duct is used to meet the requirement for combustion air supply, as described in paragraphs A through D, above, the opening of the duct shall be located so there is no possibility of cold air affecting steam or water piping, electrical equipment or mechanical equipment.

F. When combustion air is supplied by mechanical means, an airflow-sensing device must be installed. It must be wired into the pre-ignition limit c to prevent the burner from starting or to stop an operating burner in case of air supply failure.

G. When all combustion air is supplied through a make-up air heater, and the appliance is interlocked to the heater, the requirements of paragraphs A through F do not apply.

Table 3.5.2.2 Canadian Minimum Area of Combustion and Ventilation Air Openings

P-K SONIC™ Boiler		Required Combustion Air Opening		Ventilation Air Opening	
Model	Input (Btu/Hr)	in^2	mm^2	in^2	mm^2
SC-2000	2,000,000	667	43,032	67	4,303
SC-3000	3,000,000	100	64,516	10	6,452
SC-4000	4,000,000	134	86,451	13.4	8,645

3.5.3 Flue Venting

This boiler is not certified for use with Type "B" vent nor with PVC venting.

P-K SONIC™ boilers are dual certified as a Category II and Category IV appliances, as defined in ANSI Z21.13/CSA 4.9, latest edition. The vent material must be as listed in the Table of Acceptable Materials for Venting Systems in *Section 3.5.1.2* above. The exhaust vent can be run horizontally or vertically.

Vent installations shall be in accordance with NFPA54/ANSI Z223.1, the National Fuel Gas Code, or CAN/CSA-B149.1, the Natural Gas and Propane Installation Code, or applicable provisions of the local building codes.

3.5.3.1 Vent Sizing

The vent must be sized in accordance with the ASHRAE Systems and Equipment handbook, Chapter 30 or according to the vent manufacturer's recommendations. When using manufactured venting systems, consult your vent supplier for correct sizing and structural support requirements.**Table 3.5.3.1 Vent Design Parameters**

P-K SONIC™ Boiler Model	Frictional Resistance	Stack Temperature	CO2 Natural Gas	CO2 LP Gas
SC-2000/SC-3000/SC-4000	0.22" wc	220 °F	9.2%	10.4%

3.5.3.2 Required Clearances

Conventional Vent Systems Clearances

The following termination clearance requirements are for conventional non direct vent installations:

- The vent system shall terminate at least 3 ft. above a forced air inlet located within 10 ft. horizontally.
- The vent system shall terminate at least 4 ft . below, 4 ft. horizontally from or 1 ft. above any door, operable window or gravity inlet into any building. The bottom of the vent terminal shall be at least 12 in. above grade or highest expected snow line (if applicable).
- Through the wall terminations shall not terminate over public walkways or over an area where condensate or vapor could create a nuisance or hazard or could be detrimental to the operation of regulators, relief valves or other equipment.

Direct Vent (Sealed Combustion) Systems Clearances

- The vent terminal shall be located at least 12 in. from any air opening into a building. The bottom of the vent terminal shall be at least 12 in. above grade. Both the vent and air intake terminals must be at least 12 in. above the highest expected snow line.
- Through the wall terminations shall not terminate over public walkways or over an area where condensate or vapor could create a nuisance or hazard or could be detrimental to the operation of regulators, relief valves or other equipment.
- When multiple direct vent appliances are adjacent, the exhaust must terminate at least 10 ft. horizontally or 3 ft. vertically from the air intake of another appliance.

⚠ WARNING

Do not locate intake or exhaust terminations directly above a walkway; dripping of condensation can cause icing of the walking surface. Maintain a minimum clearance of 6 ft (1.83 m) horizontally from any electric or gas meter, regulator or relief equipment.

NOTICE!

Make sure that the weight of the vent is **not supported** by the boiler vent collar. **The collar is not designed to support the weight of the vent.** Horizontal vent sections shall be supported in a manner to prevent sags or low spots where condensate can collect. Structural supports must be connected to building elements of sufficient strength to withstand the weight of the vent system and any bending forces imposed by the venting system.

Interior Component Clearances

All vent system components shall be installed so as to maintain the following required minimum clearances:

Table 3.5.3.2

	Combustible	Non-Combustibles
Unlisted single wall metal pipe	Do NOT Use	Do NOT Use
Single wall PVC pipe	Do NOT Use	Do NOT Use
UL 1738 listed Category IV vent	Per manufacturer's listing	Per manufacturer's listing

Figure 3.5.3.2

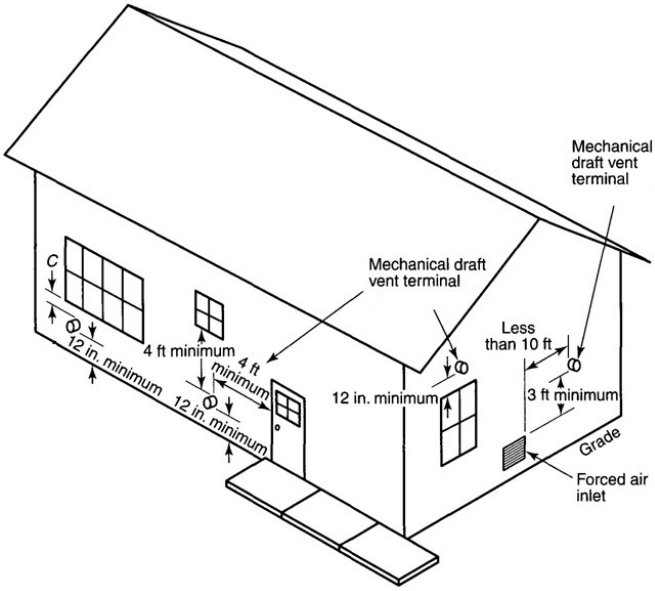

Reference: NFPA 54/ANSI Z223.1 National Fuel Gas Code

WARNING

The boiler vent should not be connected into any portion of another mechanical draft system without consulting the vent manufacturer. The boiler shall not be connected to any part of a vent system serving a Category I appliance, nor shall a Category I appliance be connected to any part of the vent system serving this appliance. For Category II common venting, refer to local venting codes. Improper interconnection of venting systems may result in leakage of flue gases into occupied spaces.

NOTE!

The condensate formed from combustion flue gases is acidic. The condensate shall be drained in accordance with local code requirements. A condensate neutralizer may be required by local code.

3.5.3.3 Flue Connection

Figure 3.5.3.3

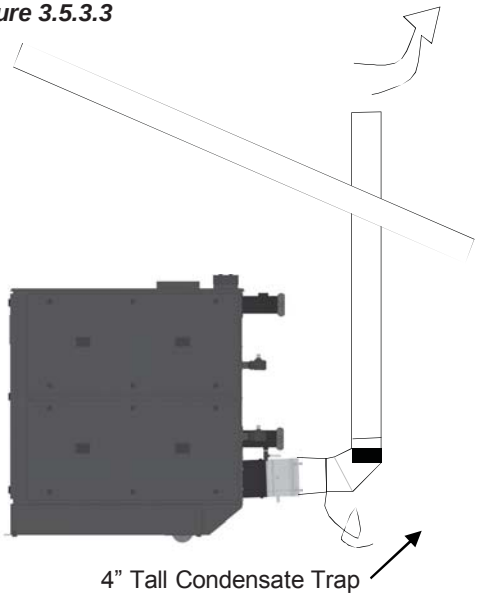

The complete exhaust with drain system is shown in the figure. The boiler connector (provided) is designed to accept a 10" OD nominal flue pipe. This connector incorporates provisions to drain condensate formed in the vent system using a 3/4" OD drain stub. This drain stub should be connected with the condensate drain on the boiler. The condensate drains shall have a 4" tall trap to prevent the passage of flue gases through the condensate system.

3.5.3.4 Vent Termination

The vent shall extend at least three (3) feet above the roof, or at least two (2) feet above the highest part of any structure within ten (10) feet of the vent. This is illustrated in the following diagram.

Additionally the boiler vent shall terminate at least 3 ft above a forced air inlet located within 10 ft.

To prevent the possible re-circulation of flue gases, the vent designer must take into consideration such things as prevailing winds, eddy zones, building configurations, etc. **Harsco Industrial, Patterson-Kelley cannot be responsible for the effects such adverse conditions may have on the operation of the boilers**.

Dimensions listed above are minimums and may not be sufficient for conditions at a specific job site.

Vertical vents are allowed to be terminated with a variety of ends, including plain straight pipe, elbow or vent tee. Horizontal vents must be terminated as illustrated in *Section 3.5.5*. A bird screen with 1" x 1" openings is recommended for the termination. Harsco Industrial, Patterson-Kelley does not recommend using a vent rain cap of any type.

Figure 3.5.3.4

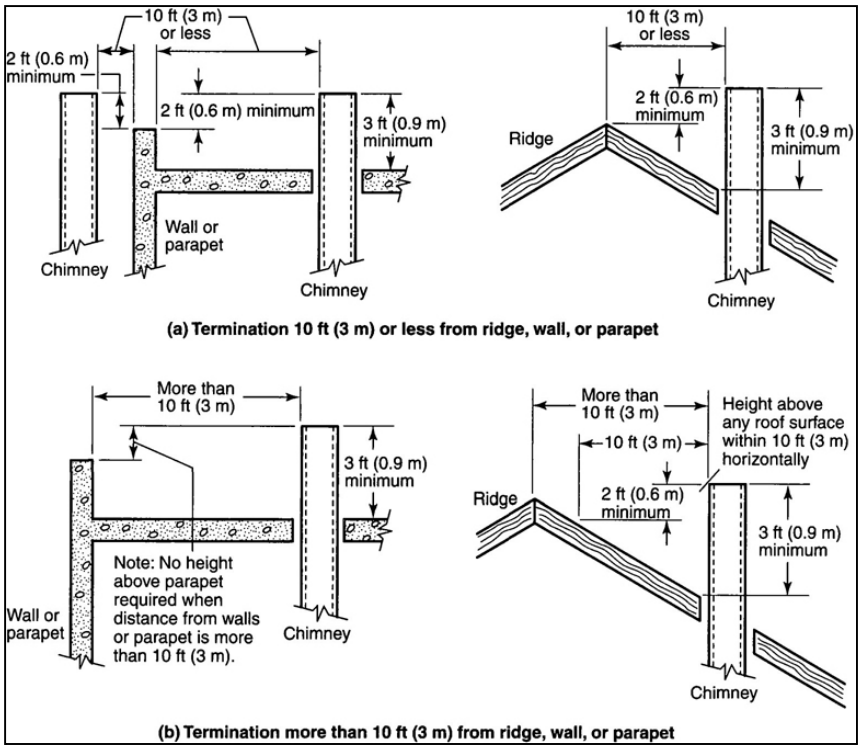

Reference: NFPA 54/ANSI Z223.1 National Fuel Gas Code

3.5.4 Venting for Multiple Boilers

While the vent design parameters outlined in *Section 3.5.3* still apply, achieving those same parameters in a combined vent system, adds a significant degree of complexity. Therefore, venting systems for multiple boilers shall be designed by experienced and knowledgeable venting professionals. The venting system shall be designed to prevent backflow of exhaust gas through idle boilers. For combined breeching installations, please follow recommendations of a qualified venting engineer/manufacturer.

Harsco Industrial, Patterson-Kelley recommends that common venting systems be designed for a maximum continuous exhaust pressure of -0.04" w.c. when measured in the common vent. Locking inline dampers are recommended on the discharge of each boiler in order to maintain a slightly positive exhaust pressure within the boiler and upstream of the damper. The -0.04" w.c. in the common flue will help make sure the exhaust gases from an online boiler does not backflow through offline boiler(s). In addition, Harsco Industrial, Patterson-Kelley also recommends the use of motorized dampers in the combustion air intake duct to help prevent the backflow of flue gases from online boilers through offline boilers.

3.5.5 Sealed Combustion/Direct Vent Systems

These boilers are also certified for operation with a sealed combustion air and pressurized venting system. Such a system employs a sealed combustion air intake duct leading from outdoors and a sealed exhaust vent terminating outdoors. Air flow through the system is maintained by the combustion air fan. Allowable configurations of vent and air intake terminations are illustrated to the right.

NOTE: Drains have been omitted for clarity.

The combined pressure drop of the air supply duct and exhaust vent must not exceed 0.44” wc. This pressure drop includes both the inlet and exhaust duct friction loss.

NOTE: The inlet air duct loss should not exceed 0.22” w.c.

If the air inlet and the exhaust vent terminate on the same wall of the building they must utilize the same type of termination fitting. Allowable termination fittings are either 90° elbows or tees.

Figure 3.5.5

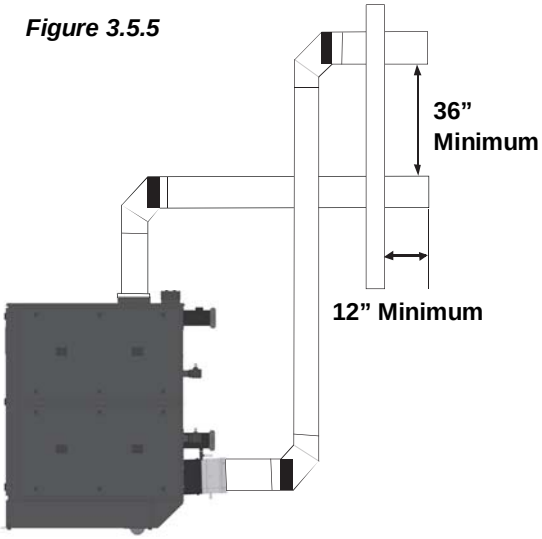

This boiler may be installed with sidewall vent using room air. (Refer to air inlet requirements *Section 3.5.2.1*)

Figure 3.5.5 shows the sidewall penetration requirements. The exhaust vent must be at least 3 feet above the air intake. The air intake and exhaust vent must extend 6" to 12" from the exterior wall and be offset.

3.5.5.1 Inlet Duct Connection to Boiler

Connect the air supply duct to the inlet air collar on the boiler. The air inlet collar is 11.875” OD. Fasten the air inlet duct to the collar with sheet metal screws at 90° angles and seal with aluminum tape or sealant.

3.5.5.2 Intake Duct Materials and Sizes

The air intake duct can be fabricated from PVC, CPVC, single wall galvanized steel, or other suitable materials. The duct must be rigid enough to maintain the full required cross sectional area under all operating conditions. Proper sealing of the intake ductwork is necessary to prevent infiltration of air from conditioned space. Joints in PVC or CPVC must be cemented. For galvanized duct, wrap each joint and seam with adhesive aluminum tape or other sealant. The installation of a birdscreen on the intake termination is recommended. Ensure that the screen does not become blocked with snow, ice, insects, etc.

3.5.6 Removing an Existing Boiler

When an existing boiler is removed from a common venting system, the common venting system is likely to be too large for proper venting of the appliances remaining connected to it.

At the time of removal of an existing boiler, while the other appliances remaining connected to the common venting system are not in operation, the following steps should be followed with each appliance remaining connected to the common venting system placed in operation:

1. Seal any unused openings in the common venting system.
2. Visually inspect the venting system for proper size and horizontal pitch and determine that there is no blockage or restriction, leakage, corrosion or other deficiency which could cause an unsafe condition.
3. Insofar as is practical, close all building doors and windows and all doors between the space in which the appliance remaining connected to the common venting system are located and other spaces of the building. Turn on clothes dryers and any appliances not connected to the common venting system. Turn on any exhaust fans, such as range hoods and bathroom exhausts, so they will operate at maximum speed. Do not operate a summer exhaust fan. Close fireplace dampers.

4. Place the appliance being inspected in operation. Follow the lighting instructions. Adjust the thermostat so that the appliance will operate continuously.

5. Test for spillage at the draft hood relief opening after 5 minutes of main burner operation. Use the flame of a match or candle or smoke from a cigarette, cigar or pipe.

6. After it has been determined that each appliance remaining connected to the common venting system properly vents when tested as outlined above, return doors, windows, exhaust fans, fireplace dampers and any other gas-burning appliance to their previous conditions of use.

Any improper operation of the common venting system should be corrected so the installation conforms to the National Fuel Gas Code, ANSI Z223.1 and CSA B149 Installation Code. When resizing any portion of the common venting system, the common vent system should be resized to approach the minimum size as determined using the appropriate tables in part 11 of the National Fuel Gas Code, ANSI Z223.1/NFPA 54 and/or CAN/CSA B149.1 Natural Gas and Propane Installation Code.

WARNING

All threaded connections must be made using a pipe compound that is resistant to the action of liquefied petroleum gases. Do not use Teflon tape on gas line threads!

NOTICE!

See Pipe Capacity for Natural Gas chart on the following page for required pipe size, based on overall length of pipe from the meter plus equivalent length of all fittings. Approximate sizing may be based on 1 cubic foot of natural gas per 1,000 Btu per hour input, i.e., 3,000,000 Btu/hr requires about 3,000 cubic feet per hour. (See "Typical Boiler Operating Conditions," *Section 4.4* for more information.)

3.6 Gas Piping

Before making the gas hook-up, make sure the boiler is being supplied with the type of fuel shown on the boiler nameplate.

The boiler shall be installed such that the gas ignition system components are protected from water (dripping, spraying, rain, etc.) during appliance operation and service (circulator replacement, control adjustment, etc.)

The boiler is factory fire-tested and adjusted for proper combustion. The gas train components are certified to handle a maximum inlet pressure of 14" w.c. (1/2 psig). Typical gas pressure supply for natural gas is 7" w.c. (11" w.c. for propane). If the available gas pressure exceeds 14" w.c., a suitable additional intermediate gas pressure regulator of the "lock up" type must be provided to reduce the pressure to less than 14" w.c. Refer to boiler label for minimum inlet gas pressure.

Figure 3.6: **Simplified Gas Piping**

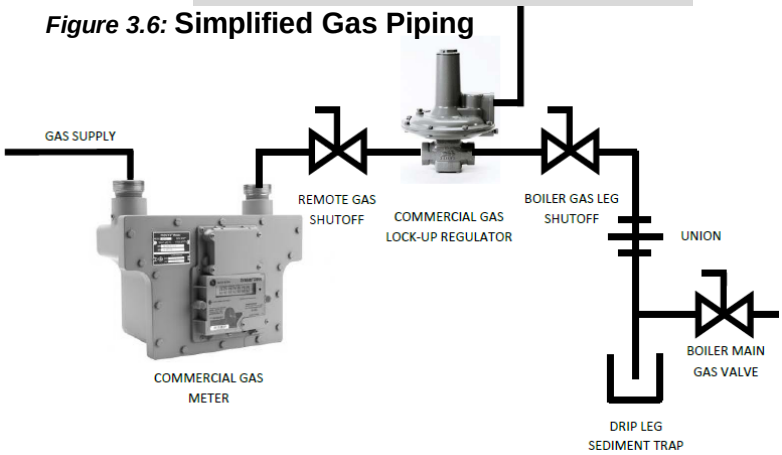

Install a sediment trap (drip leg) and a union connection ahead of the primary manual shutoff valve on the boiler. A gas piping schematic is shown above. Gas piping should be installed in accordance with National Fuel Gas Code, ANSI Z223.1, latest edition, and any other local codes which may apply; in Canada see CAN/CSA-B.149.1, latest edition. In the Commonwealth of Massachusetts, the gas cock must be a "T-handle type."

Table 3.6: **Pipe Capacity for Natural Gas**

Nominal Iron Pipe Size (Inches)	Internal Diameter (Inches)	Equivalent Pipe Length		Maximum Capacity in Cubic Feet of Natural Gas Per Hour Pressure Drop of 0.5 inch Water Column/Equivalent Length of Pipe (in feet)						
		90° Ell (Feet)	Tee (Feet)	20	40	60	80	100	150	200
2	2.067	5.17	10.3	2750	-	-	-	-	-	-
2.5	2.469	6.16	12.3	4350	3000	2400	-	-	-	-
3	3.068	7.67	15.3	7700	5300	4300	3700	-	-	-
4	4.026	10.1	20.2	15800	10900	8800	7500	6700	5500	4600

NOTICE!
The SC-2000 boiler is furnished with 3" grooved connections and Victaulic Style 75 couplings. The SC-3000 and SC-4000 boilers are furnished with 4" grooved connections and Victaulic Style 75 couplings. These couplings must be used with the EPDM Victaulic seals. Isolating valves must be installed in both the inlet and outlet water connections.

NOTICE!
The Condensate Trap must be piped to a drain in accordance with all national, state and local codes. If installed outdoors and the local requires freeze protection, it must be field heat traced.

3.6.1 Gas Supply Piping by Installer

The boiler and all gas piping connections should be pressure-tested and must be checked for leaks before being placed into service. Test with compressed air or inert gas if possible.

The boiler must be **disconnected** at the boiler's manual shut-off valve (located at the end of the supplied gas train) from the gas supply piping system during any pressure testing of the system at pressures in excess of 1/2 psig (14" w.c.).

During any pressure testing of the gas supply piping system at pressures equal to or less than 1/2 psig (14" w.c.), the boiler must be isolated from the gas supply piping system by closing the manual shut-off.

Some leak test solutions, including soap and water, may cause corrosion of the carbon steel gas pipe fittings. These leak test solutions should be cleaned off after testing is complete.

3.7 Boiler Water Piping

3.7.1.1 Piping with Refrigeration Lines

When installed in a two-pipe system that provides both chilled and hot water, the control system should be configured so as to limit the time rate of change of temperature at the boiler. Consult your authorized Harsco Industrial, Patterson-Kelley boiler representative for application guidance.

3.7.1.2 Piping with Air Handling Units

The boiler piping system of a hot water heating boiler connected to heating coils located in air handling units, where they may be exposed to refrigerated air circulation, must be equipped with flow control valves or other automatic means to prevent gravity circulation of the boiler water during the cooling cycle.

Figure 3.7.2

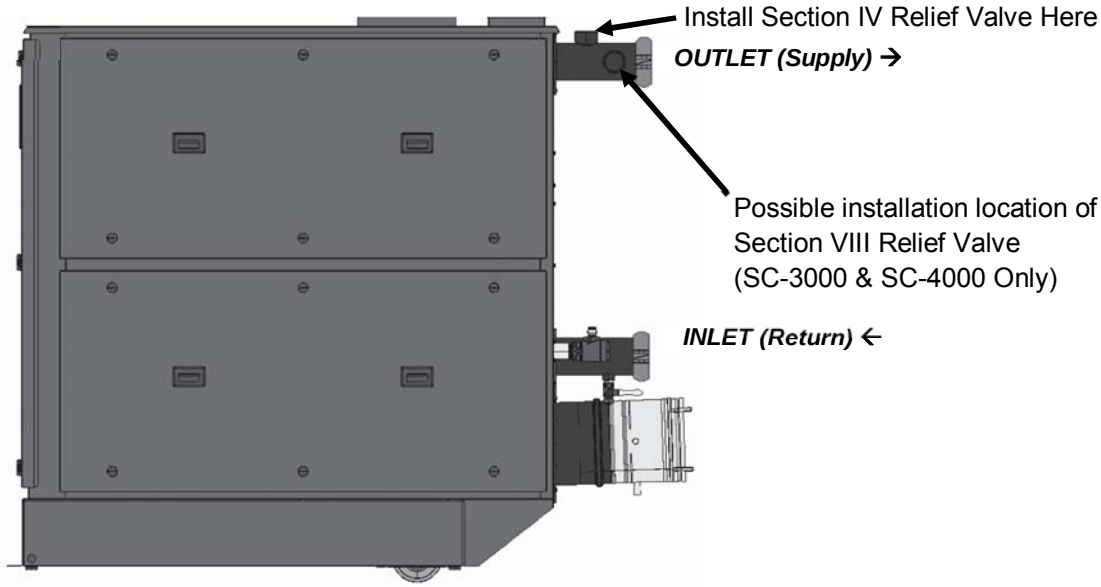

3.7.2 Boiler Inlet and Outlet Connections

All water connections should be in compliance with national, state and local code requirements. Adapters from Victaulic to NPT are available from Harsco Industrial, Patterson-Kelley. The bottom rear connection to the boiler is the INLET and must be used for the return from the system. The top rear connection to the boiler is the OUTLET and must be connected as the supply to the system. All water piping must be installed such that no stresses are transmitted to the boiler. The boiler **shall not** be used as a pipe anchor.

3.7.3 Boiler Water Piping by Installer

Strainer

To avoid possible contamination of the boiler with dirt, rust or sediment from the system, a strainer near the boiler inlet is strongly recommended. Even new systems may contain sufficient foreign material to eventually reduce the performance of the heat exchanger. Adequate circulation of good clean water is essential for maximum efficiency and long life of the boiler.

Relief Valve Piping

Each boiler must be supplied with pressure-relief valves sized in accordance with ASME requirements. The relief valves must be piped to an acceptable drain. Reducing couplings or other restrictions are not permitted in the discharge line.

The SC-2000, SC-3000 and SC-4000 boilers require an ASME Section IV relief valve to be installed on the top of the OUTLET (Supply) connection. The spindle of the relief valve must be vertical. The ASME Section IV relief valves are available for purchase from Harsco Industrial, Patterson-Kelley.

The SC-3000 and SC-4000 boilers also require an ASME Section VIII relief valve to be installed somewhere on the boiler or connecting piping before any isolation valve(s). A side port on the OUTLET (Supply) connection is available for this purpose. The ASME Section VIII relief valve is provided with the SC-3000 and SC-4000 boilers for convenience.

Low Water Cut-off

The boiler is furnished with a probe-type low water cut-off; no field piping is required. If the water level in the boiler drops below the probe, the boiler will shut down and LOCKOUT LOW WATER LEVEL will be displayed on the control panel. The low water cutoff circuit will automatically reset when the low water condition clears; however the boiler controls will retain the lockout condition until the reset button on the display is depressed. Installation of external limit controls may be required by certain codes or in certain installations. Review applicable local codes for details.

Drain Valve and Piping

A drain valve is factory installed in the boiler inlet (system return) piping. Prior to draining the boiler, electrical power and gas supply must be turned off to the boiler, and the boiler must be isolated from the system at the supply and return connections.

Condensate Drain

The condensate is acidic (pH between 3.0 and 5.0) and may be corrosive to some building drain systems. A condensate neutralization system may be required and is available from Harsco Industrial, Patterson-Kelley. If the condensate drainage system is exposed to freezing temperatures, it must be field heat traced. The boiler could generate up to one gallon of condensate per 100,000 BTU input. As an example, an SC-4000 boiler at full fire can produce 40 gallons per hour of condensate!

NOTICE!
The low water cutoff probe only allows boiler operation when the water level in the boiler is sufficient. It does not detect low water conditions in other parts of the system. Installation of additional low water safety devices to protect the system should be considered.

NOTICE!
This drain valve is factory installed for draining the boiler water only, not the entire system. Draining of the system through the boiler will result in depositing sediment from the system in the boiler which will result in poor heat transfer characteristics of the boiler and early boiler failure.

NOTICE!
Condensate Trap must be piped to drain in accordance with all national, state and local codes.

NOTICE!
Glycol or other treatment chemicals added to the system must be certified by the chemical manufacturer for use in multi-metal systems that include Stainless Steel boilers.

NOTICE!
Under no circumstances should petroleum based cleaning or sealing compounds be used in the boiler system.

NOTICE!
Under no circumstances should the hydronic system be flushed while the boiler is attached to the system since the debris or corrosion products could accumulate in the boiler and plug the boiler's heat exchanger.

3.7.4 Flushing and Filling

Water Quality

The boiler's heat exchanger is made of stainless steel. The heat exchanger requires proper water conditions to remain efficient and function properly. For information, please refer to Harsco Industrial Patterson Kelley Multi- Metal Systems Water Quality Standards as it appears in *Appendix 3* as this applies to the warranty of your heat exchanger.

⚠ WARNING

Never attempt to operate a boiler that has failed to pass all the safety checks described below.
Operating a boiler that has failed a safety checks could result in injury. Bypassing safety mechanisms will result in unsafe boiler operation which could result in injury or death.

⚠ WARNING

After checking controls by manual adjustment, make sure they are always reset to their proper settings.

NOTICE!

If the expected error code(s) do not appear, call for qualified service.

3.8 Pre-Start Checklist

Before attempting to start the boiler, make sure the following items have been completed.

1. Inspect the gas train, blower, ignition electrode and boiler in general to be sure there was no damage during shipment or installation.
2. Flue gas from the boiler is properly vented.
3. Gas connection has been made, pressure tested for leakage and the line purged of air. Make sure all required vents have been installed.
4. Water connections are complete and the boiler and system have been filled and purged of air.
5. The boiler is connected to the correct electrical power source listed on the nameplate, a disconnect having adequate overload protection is required.
6. Combustion air openings are not obstructed in any way and have adequate capacity.
7. The boiler is placed the proper distance from any combustible walls.
8. Relief valves have been piped to an acceptable drain at a safe point of discharge.
9. Condensate piping is properly connected.
10. Verify system water quality is within specifications.

3.9 Safety Checks

The following checks of safety systems must be made before putting the boiler into normal operation.

Before firing the boiler refer to *Section 4* for information on the use of the controls, lighting, and shut-down procedures.

3.9.1 Ignition Safety System Test

Test the ignition system safety shutdown as follows:

1. Cycle the boiler on by generating a heat request. (The method for this will depend on your boiler configuration.)
2. During the pre-purge cycle (before ignition), smoothly close the downstream manual isolation valve (inside the boiler cabinet) to reduce the gas flow.
3. Closing the manual isolation valve will prevent a successful ignition, and the NURO will display either:
   - 109: **"Ignition Failed"**
   - 110: **"Ignition Failure Occurred"**

⚠ CAUTION

The user should become thoroughly familiar with the operation of the boiler and controls before attempting to make any adjustments.

⚠ CAUTION

Changing parameters requires an understanding of the parameters and the functionality of the boiler. The boiler may not function properly if parameters are changed from the factory values.

These alarms indicate an ignition failure and the lockout will remain until the control is reset. After completing this test, turn the boiler off, open the downstream manual isolation valve, then turn the boiler back on.

3.9.2 Low Water Cut-out Test

The boiler is furnished with a probe-type low water cut-out. The probe is installed near the boiler's outlet in order to detect the presence of water at the highest possible location in the boiler and is connected to the low water cut-out circuit board by a single wire. The low water cut-out circuit board is located inside the boiler's front door, toward the top of the control panel and is identified with a yellow label.

In order to test the low water cut-out, press and hold the red "Push to Test" button for at least 5 seconds. A manual lockout reset error displaying 10010: **"Low Water Limit"** on the NURO touchscreen should occur. The red LED indicator on the Low Water cut-off will no longer be illuminated.

> ***Optional Test Method:*** First turn the boiler off, and then turn off the boiler's circulating pump. Isolate the boiler from the system. Drain the water level below the low water cut-off probe. Turn the boiler back on. It should not operate, and a manual lockout reset error displaying 10010: **"Low Water Limit"** on the NURO touchscreen should occur. The red LED indicator on the Low Water cut-off will no longer be illuminated.

Return the system to normal operation by refilling with water, restarting the boiler's circulating pump, and then turning the boiler back on.

3.9.3 Manual Reset High Temperature Limit Test

The boiler is furnished with a manual reset high temperature limit which features a probe installed near the boiler's outlet in order to measure the outgoing supply water temperature. This probe is connected to the manual reset high temperature limit by a thin, metal capillary tube. The manual reset high temperature limit is located inside the boiler's front door, toward the top of the control panel and is identified with a yellow label.

Test the manual reset high temperature limit control as follows:

1. Cycle the boiler on by generating a heat request.
2. Allow the boiler to proceed through ignition until main flame is established.
3. Using a flathead screwdriver, turn down the setting on the manual reset high temperature limit to its lowest value. Turning the screwdriver counter-clockwise decreases the temperature setting.
4. When the outgoing supply water temperature exceeds the setting on the manual reset high temperature limit, the main burner will shut off.

The NURO touchscreen will display 10009: **"High Temperature Limit"**. Return the system to normal operation by readjusting the setting on the manual reset high temperature limit to its default setting, press the reset button on the manual reset high temperature limit, and finally touch any prompts from the NURO control.

3.9.4 Gas Pressure Switch Tests

Low Gas Pressure Switch

The boiler is furnished with a low gas pressure switch, installed near the boiler's main gas shutoff/control valve. The operation of this switch must be checked as follows:

1. Cycle the boiler on by generating a heat request.
2. Allow the boiler to proceed through ignition until main flame is established.
3. Slowly close the main gas cock while the burner is operating.
4. When the available gas pressure drops below the setting of the low gas pressure switch, the main burner will shut off.

When the low gas pressure switch opens, the NURO touchscreen will display 10012: **"Low Gas Limit"**. Even after re-opening the main gas cock, 10012: **"Low Gas Limit"** will remain on until the NURO display until the boiler is manually reset.

High Gas Pressure Switch

The boiler is furnished with a high gas pressure switch, installed near the boiler's main gas shutoff/control valve. The operation of this switch must be checked as follows:

1. Before starting the boiler, close the downstream gas cock located inside the boiler's enclosure.
2. Cycle the boiler on by generating a heat request.
3. Allow the boiler to proceed to ignition.
4. When the gas pressure exceeds the setting of the high gas pressure switch, the main burner will shut off.

When the high gas pressure switch opens, the NURO touchscreen will display 10011: **"High Gas Limit"**. Even after re-opening the downstream gas cock inside the boiler, 10011: **"High Gas Limit"** will remain on the NURO display until the boiler is manually reset.

3.10 Initial NURO Control Setup & Adjustment

This manual covers basic NURO control setup and adjustment. For a basic walkthrough of the control setup, please refer to the NURO Getting Started Guide which is helpful for basic boiler installations. For more complex boiler applications and more information on the parameters, please refer to the NURO Advanced User's Guide.

Startup

When the boiler is powered on, the NURO touchscreen will display an initial Startup Screen and Rep Information Screen (***Figure 3.10a & Figure 3.10b***). After a brief time, the Rep Information Screen will timeout automatically which will load the Home Screen (***Figure 3.10c***). The Home Screen shows a snapshot of the boiler's current operating conditions:

- Outlet (Supply) Temperature
- Inlet (Return) Temperature
- Exhaust Temperature
- Firing Rate, etc.

Figure 3.10a: Startup Screen

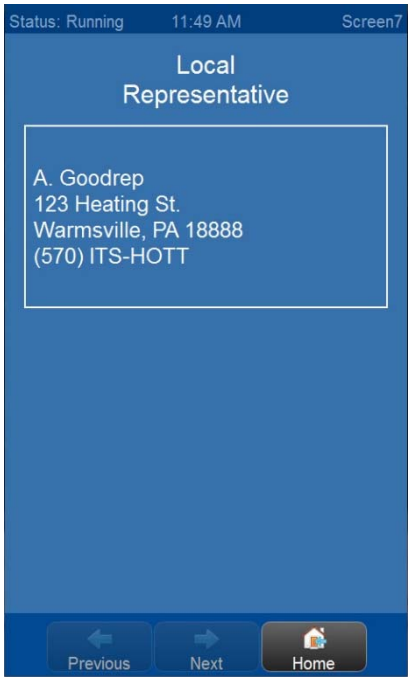

Figure 3.10b: Rep Information Screen

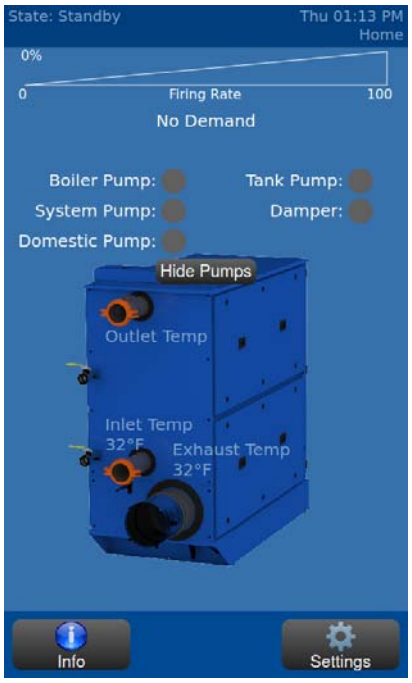

Figure 3.10c: Home Screen

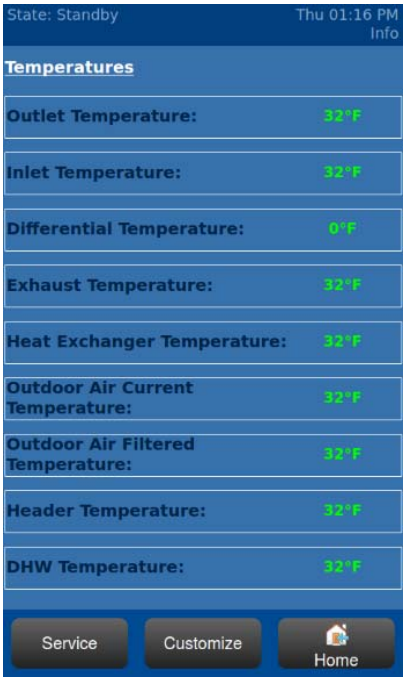

Figure 3.10d: Information Screen

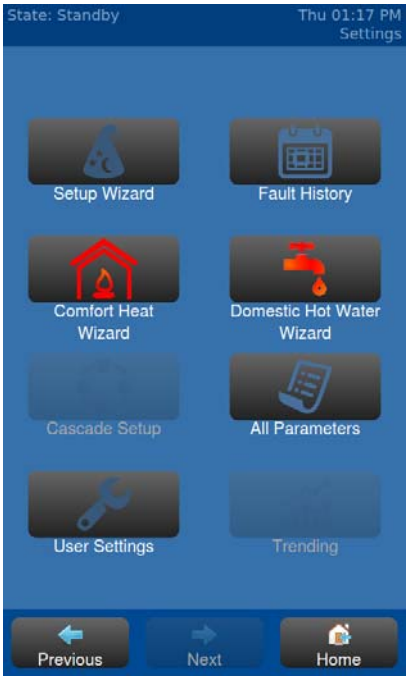

Figure 3.10e: Main Menu Screen

Figure 3.10f: Setup Wizard

Information Screen

Pressing the "Info" button in the lower left corner will load the Information Screen (***Figure 3.10d***). The Information Screen contains real-time read-only boiler values such as temperatures, relay states, etc. Scroll through the Information Screen by sliding your finger up or down.

This screen is helpful to determine the operating characteristics of the boiler. For more information on any value, please refer to the NURO Getting Started Guide or the NURO Advanced User's Guide.

Comfort Heat Setup Wizard

From the Home Screen, touch the "Settings" button in the lower right corner which will load the Main Menu Screen (***Figure 3.10e***). Next, touch the "Comfort Heat Wizard" to launch the Setup Wizard (***Figure 3.10f***).

The first step of the Setup Wizard is to assign functionality to the user-configurable Relays A thru D. Touching one of the Relay buttons will bring up the Relay Assignment Screen. This screen allows the user to assign functions like "Boiler Pump", "System Pump", "Flame Detected" and "Air Damper" to the relays. **NOTE:** The relay assignments **must** agree with the wiring to/from the boiler. For example, if Relay A is user-configured to enable/disable the Boiler Pump, the control wires to operate the boiler pump must be properly wired to the Relay A terminals in the High Voltage (TB2) terminal block. Press the "Next" button to continue.

The next step of the Setup Wizard is to define how the boiler is enabled. This will prompt the user to "Check All That Apply". Most installations may include a dry contact "Remote Enable" signal to the boiler. Other installations may also use an "Outdoor Air Sensor". Select the methods by which the boiler will be enabled or disabled for operation. Press the "Next" button to continue.

Once the control strategy has been defined, the Setup Wizard steps through the temperature setpoints, differentials, outdoor air reset curve (if applicable), etc. You can change these values in one of three ways:

1. Use the slider bar for quick, large temperature adjustments.
2. Use the UP or DOWN arrows for fine-tuning the temperature.
3. Touch the numeric value directly which will load a 10-digit keypad for precise control settings.

Comfort Heat Operation

Once the desired temperature adjustments are complete, touch the "Home" button to return to the Home Screen. The Home Screen will now show the temperature setpoint, and will announce the operating condition "Standby", "Prepurge", "Ignition" at the top of the screen. Ensure that all external control equipment (Remote Enable, Outdoor Air Temperature Sensor, etc.) selected during the Setup Wizard is installed and properly wired to the boiler. The boiler is now programmed for Comfort Heat operation. For applications including Domestic Hot Water (DHW), Cascade, etc., please refer to the NURO Getting Started Guide or NURO Advanced User's Guide.

3.11 Fuel/Air Adjustment

The SC-2000, SC-3000 and SC-4000 boilers are equipped with a gas/air ratio control valve and a gas safety shut off control valve, combined into one valve assembly. The valve functions in series with the variable speed combustion blower to supply the correct gas/air mixture for optimum firing performance and efficiency. The combustion blower speed is controlled automatically by the boiler controller. The blower speed determines the amount of air flow and the amount of suction/negative pressure at the gas valves. The gas valve adjusts gas flow to maintain the proper delivery pressure at the outlet of the valve.

Figure 3.11

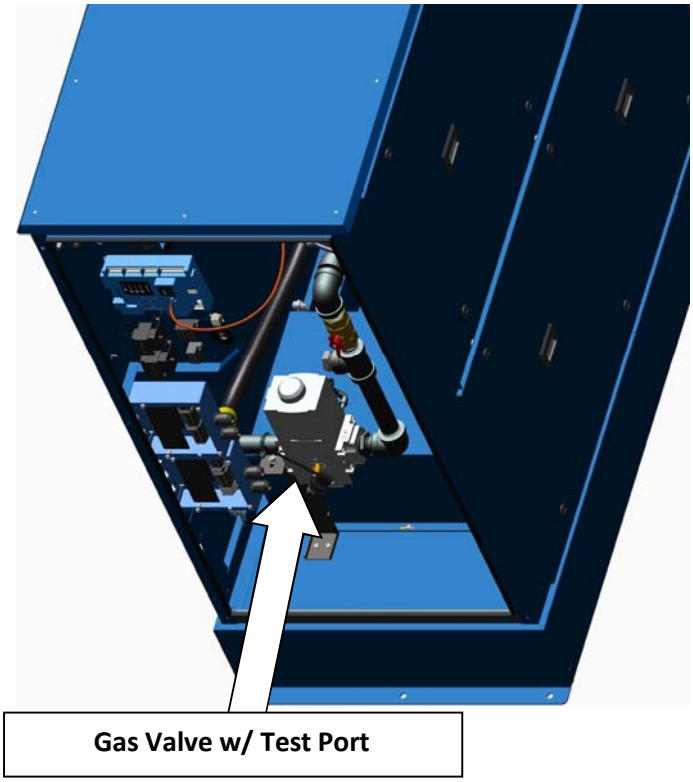

3.11.1 Gas Pressure Adjustment

See rating plate for the minimum and maximum gas pressure of the boiler. The supply pressure during main burner operation must be greater than the minimum indicated on the rating plate. Nominal gas supply pressure is 7" w.c. for natural gas. The gas pressure must not exceed 14" w.c. which is the maximum allowable pressure on the gas train components. Each boiler is furnished with a manual shut-off valve which has an integrated test port. This port is located on the upstream side of the valve body for measuring supply pressure. (Refer to ***Figure 3.11***)

The air flow is pre-set at the factory prior to shipment. Gas flow is dependent primarily on fan speed not upstream gas pressure. The automatic gas valve may have to be adjusted to obtain proper combustion readings for specific local conditions. A combustion analyzer must be used. Combustion must be set in accordance with ***Table 3.11.2***.

3.11.2 Combustion Setup and Adjustment

To adjust/tune combustion, use the NURO's "Manual Control Firing Rate" mode. To access, touch the "Info" button in the lower left corner of the screen, and then touch "Service" in the lower left. Next, touch "Press to Activate Manual Control" which will open the "Manual Control Firing Rate" mode. This test mode should be used when adjusting or tuning the gas safety shut off/control valve on the SC-2000, SC-3000 or SC-4000 boilers.

In this mode a heat request is required. Once the boiler cycles on and is running in "Manual Control Firing Rate", use the UP and DOWN arrow keys or the slider to force the boiler to operate at low fire or high fire (or anywhere in-between). To prevent the boiler from cycling off prematurely during adjustment, ensure that any load devices (air handlers, control valves, radiators, etc.) are in operation and able to shed/dump the heat load created by the boiler.

Table 3.11.2: **Recommended Combustion Settings for SONIC Boilers**

Fuel	Nominal Gas Pressure	High Fire Setting		Low Fire Setting	
		% O_2	% CO_2	% O_2	% CO_2
Natural Gas	7" w.c.	4.8 ± 0.2	9.2 ± 0.1	5.0 ± 0.2	9.1 ± 0.1
Propane Gas	11" w.c.	4.8 ± 0.2	10.4 ± 0.3	5.0 ± 0.2	10.3 ± 0.3

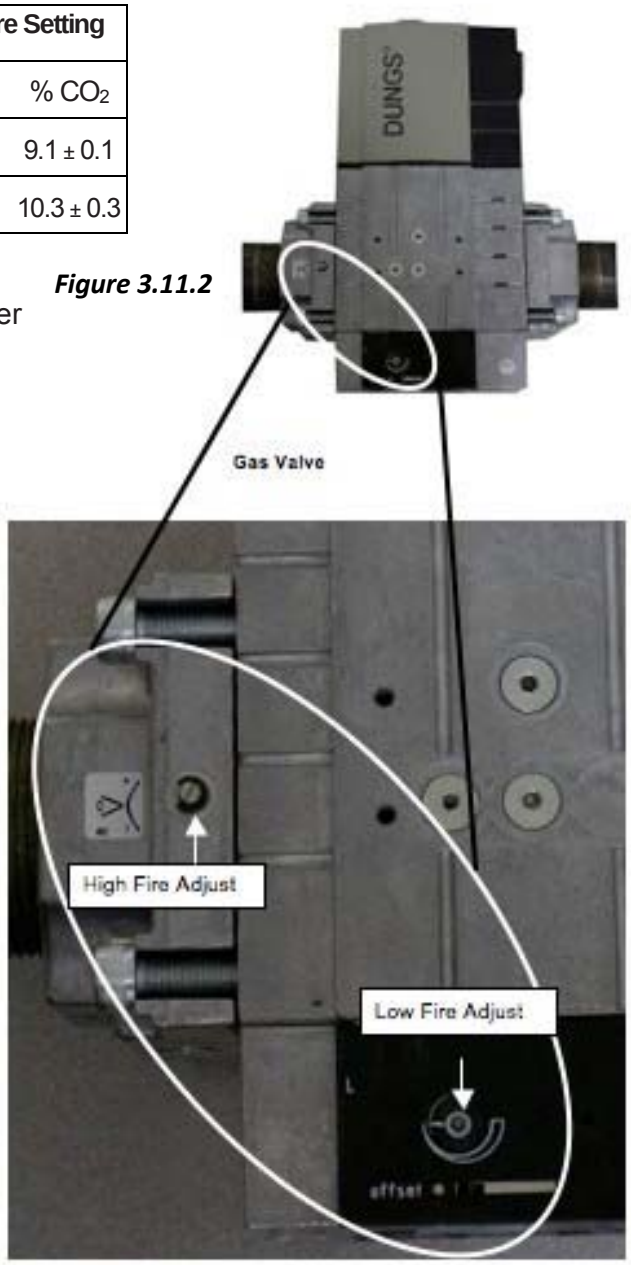

Figure 3.11.2

Adjusting High Fire

Required Tools: Flat head screwdriver and combustion analyzer

Start the boiler and observe proper operating parameters for the system. Set boiler to the "Manual Control Firing Rate", as described above, and increase the firing rate to 100%.

Check combustion readings using the combustion analyzer. If combustion readings do not agree with ***Table 3.11.2***, adjust as follows:

Open the front panel of the boiler. Locate the automatic gas valve. Turn the orifice adjusting screw, located on the downstream side of the valve, in the direction indicated on the sticker to increase or decrease the gas flow. Increasing the gas flow decreases the combustion exhaust O_2, while decreasing the gas flow increases the combustion exhaust O_2.

There will be a slight time delay between the adjustment and the response of the CO_2 /O_2 measuring instrument. Adjust the settings in small increments and allow the combustion readings to stabilize before readjusting. When desired adjustments are complete, check and adjust low fire if necessary.

Adjusting Low Fire

Required Tools: 2.5 mm hex wrench and combustion analyzer

Start the boiler and observe proper operating parameters for the system. Set boiler to the "Manual Control Firing Rate", as described above, and decrease the firing rate to 1%. Once the boiler has reached low fire operation, check combustion readings using the combustion analyzer. If combustion readings are not in accordance with ***Table 3.11.2***, adjust as follows:

Open the front panel of the boiler. Locate the automatic gas valve. Turn the offset screw, located in the bottom center of the side of the valve, in the direction indicated on the label to increase or decrease the gas. Increasing the gas concentration decreases the O_2, while decreasing the gas concentration increases the O_2.

There will be a slight time delay between the adjustment and the response of the CO_2/O_2 measuring instrument. Adjust the settings in small increments and allow the combustion readings to stabilize before readjusting. When desired adjustments are complete, check and adjust High Fire if necessary.

3.11.3 Checking Flame Signal

Touch the "Info" button in the lower left corner of the NURO display to load the "Information" menu which shows real-time read-only boiler values such as temperatures, relay states, etc. Scroll down the "Information" menu to find the "Flame Signal" value. This value displays the strength of the combustion flame (units = V) as measured by the ignition electrode/ionization probe. When the boiler is in standby, prepurge, or postpurge the flame signal should read 0V. During main flame, a strong flame signal should read between 20-50V.

4 Operations

4.1 General

4.1.2 NURO Control Panel

Once the boiler has been installed in compliance with this manual, it is necessary to open the front door of the boiler in order to access the power (on/off) switch located in the upper right hand corner of the NURO control panel, as shown in ***Figure 4.1.1a*** and ***Figure 4.1.1b***:

Figure 4.1.1a (SC-2000)

Figure 4.1.2b (SC-3000 & SC-4000)

⚠ WARNING

Do not use this boiler if any part has been under water. Immediately call a qualified service technician to inspect the boiler and to replace any part of the control system and any gas control which has been under water. Failure to do so could result in electrocution, injury, or death.

⚠ WARNING

If overheating occurs or the gas supply fails to shut off, do not turn off or disconnect the electrical supply to the pump. Instead, shut off the gas supply at a location external to the boiler.

NOTICE!

The heat exchanger is constructed and stamped for 160 psig maximum operating pressure and 210°F maximum temperature.

Figure 4.1.2

4.1.2 NURO Touch Screen Interface

Once the boiler is switched to the “ON” position, the SONIC boiler can be programmed and operated with the NURO touch screen interface located on the front door as shown in ***Figure 4.1.2***. A clear plastic cover protects the touch screen which can be opened by pinching the clasp and swinging open to the left.

4.1.3 Factory Tests

Safe lighting and other performance criteria were met with the gas manifold and control assembly provided on this boiler when the boiler underwent factory tests specified in ANSI Z21.13/CSA 4.9, latest edition. (See "Factory Firetest" label.)

4.2 Normal Lighting and Shut-down Procedures

Normal Lighting Procedures

1. Make sure the system is filled with water and water is circulating in the system. Turn on electrical supply and open the gas supply valves to the boiler.
2. Turn the on/off switch to the "On" position. If an error is indicated, refer to the NURO Advanced User's Guide to troubleshoot the problem and take necessary corrective action before proceeding.
3. Set the desired high temperature limit and operating temperature. The NURO controller will now begin the automatic firing sequence.

Normal Shut Down Procedures

1. Allow the boiler to turn off on its own once the temperature satisfies, or remove the call for heat to the boiler.
2. Once the boiler completes a successful "Post-Purge" and "Post-Pump", it will return to "Standby".
3. Once in standby, turn the on/off switch to the "Off" position.
4. Close all manual gas valves (See ***Figure 4.3***).
5. Turn off the electrical disconnect to the boiler.

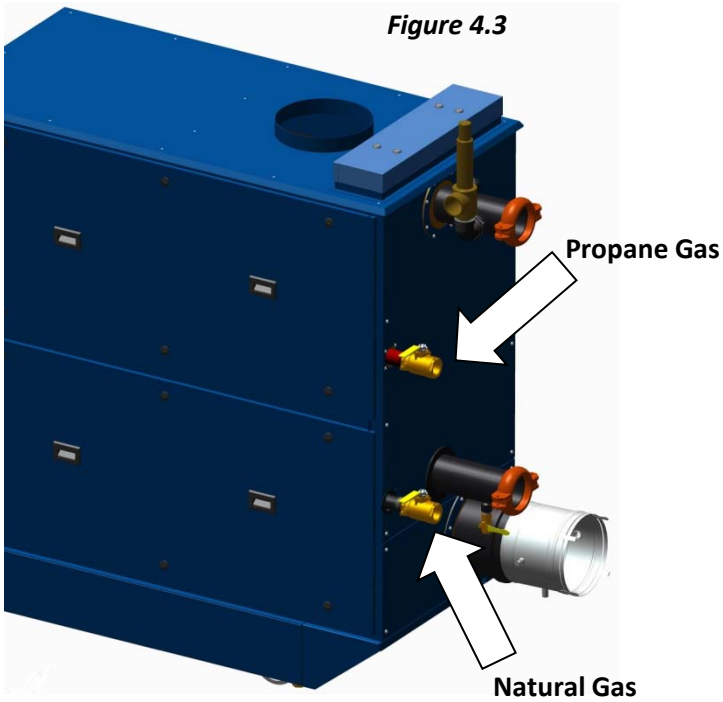

Figure 4.3

4.3 Emergency Shut-Off

In case of emergency, shut off the gas supply at a valve external to the boiler. See ***Figure 4.3*** for valve locations. The upper shut off valve is for Propane Gas and the lower valve for Natural Gas.

4.4 Typical Boiler Operating Conditions

Table 4.4

Model Number	Input Rating (BTU/Hr)	Voltage	Phase	Total Amperage	Gas Flow Rate (CFH) Natural Gas (1030 Btu/ft^3)	Gas Flow Rate (CFH) LP Gas (2500 Btu/ft^3)	Output Capacity (Btu/hr)
SC-2000	2,000,000	208-240	Single	Less than 15	1942	800	1,920,000
SC-3000	3,000,000	208-240	Three	Less than 20	2913	1200	2,880,000
		440-480	Three	Less than 20			
SC-4000	4,000,000	208-240	Three	Less than 20	3883	1600	3,840,000
		440-480	Three	Less than 20			

⚠ WARNING

Lockout/tagout procedure must be employed when servicing this unit. Failure to do so could result in electrocution, injury, or death.

⚠ WARNING

Label all wires prior to disconnection when servicing controls. Wiring errors can cause improper and dangerous operation.

⚠ WARNING

Use care when reassembling main gas line and ensure all connections are tight. Use a leak detector to check for leaks before and after servicing any component of the gas piping. Failure to do so could result in injury or death.

⚠ WARNING

Use care when servicing boiler to prevent the accumulation of gas in or around the combustion chamber. Pockets of accumulated gas are subject to combustion and/or explosion which could result in injury or death.

⚠ WARNING

Determine the cause of any lockout or errors before resetting the boiler. If able to determine cause of lockout, then appropriate corrective action should be taken. If unable to determine cause of the problem, call a qualified service technician. Verify proper operation after servicing.

⚠ WARNING

Check daily to be sure that the boiler area is free and clear of any combustible materials, including flammable vapors and liquids.

5 Maintenance

5.1 Maintenance and Inspections Schedule

This schedule applies when the boiler is in use. Verify proper operation after servicing. **NOTE:** The blower motor is permanently lubricated and does not require periodic lubrication.

5.1.1 Daily

Observe operating temperature and general conditions. Make sure that the flow of combustion and ventilating air to the boiler is not obstructed. Determine the cause of any service codes or lockouts on the display panel. Observe any unusual noises or operating conditions and make the necessary corrections. Notify responsible individuals for required corrective action or repair.

5.1.2 Weekly

Observe the conditions of the main flame. A normal high fire flame is mostly orange with a blue halo, while at low fire the burner will glow yellowish-orange.

Correct air adjustment is essential to the efficient operation of this boiler. Ensure that the flow of combustion and ventilation air is not obstructed.

If an adjustment in the combustion appears necessary, the flue gas composition should be checked with a carbon dioxide (CO_2) or oxygen (O_2) analyzer and compared to the values stated in ***Table 3.11.2*** of *Section 3.11.2*. If an adjustment to the combustion is necessary, call a qualified and knowledgeable installer or service agency that has been trained on the Harsco Industrial, Patterson-Kelley boilers.

5.1.3 Monthly

1. Press the “Info” button on the NURO touch screen to load the Information Screen and scroll down to view the flame signal measured in Volts. Typical flame signals should read between 20-50V. If the flame signal is below 20V, the ignition electrode may need to be replaced.
2. Test the low water level cut-off. Refer to *Section 3.9.2*.
3. Test the manual reset high-temp limit. Refer to *Section 3.9.3*.
4. Test low gas pressure switch. Refer to *Section 3.9.4*.
5. Test operating temperature controls by reducing or increasing temperature setting as necessary to check burner operation.
6. Check the condensate drain system. Clean and flush as necessary.

Installation and service must be performed by a qualified and knowledgeable installer or service agency that has been trained on the Harsco Industrial, Patterson-Kelley boilers.

5.1.4 Semi-Annually (Required for Boilers Operated Year Round)

In addition to the recommended monthly service:

1. Clean burner of any accumulated dust or lint. Refer to *Section 5.2* on "Cleaning the Burner."
2. Inspect burner for any signs of deterioration or corrosion. Replace immediately if deterioration or corrosion is evident.
3. Check the pH level of the system fluid. Verify the pH is in accordance with *Appendix 3*.
4. Inspect and clean the condensate system and check for leaks. If a condensate neutralization kit is present, open the lid and inspect the limestone rocks. If they are absent or have been significantly worn away, replace them with new limestone rocks. Use high-calcium (or pure) limestone.

5.1.5 Annually

In addition to the recommended monthly and semi-annual service:

1. Inspect and clean the inlet screen of any accumulated dust or lint.
2. Check burner and clean off any soot or foreign material that may have accumulated. Refer to *Section 5.2* on "Cleaning the Burner." Check for corrosion of the burner and its parts. If there is evidence of deterioration or corrosion, replace immediately. Inspect combustion chamber when the burner is removed for inspection. Note any signs of deterioration. Clean as necessary.
3. Inspect and clean heat exchanger. Remove the various covers to inspect the flue gas passageways. Clean the combustion side casting pins by flushing with clean water and blowing dry with compressed air. Do not use any cleaning agents or solvents. Do not use soap. A soft nylon brush may be used in accessible areas. Be sure to inspect the condensate collection pan that is the lowest part of the heat exchanger.
4. Replace the ignition electrode and gasket.
5. Drain and flush the water side of the heat exchanger as required (separate from system flush) using clean water only.
6. Inspect and clean the condensate system and check for leaks. If a condensate neutralization kit is present, open the lid and inspect the limestone rocks. If they are absent or have been significantly worn away, replace them with new limestone rocks. Use high-calcium (or pure) limestone.
7. Examine the venting system. Refer to the vent manufacturer's instructions for requirements in addition to those listed below.
   a. Check all joints and pipe connections for tightness.
   b. Check pipe for corrosion or deterioration. If any piping needs replacing, do so immediately.
   c. Inspect and clean any screens in the vent terminal.
8. Qualified service personnel should thoroughly inspect the heating system and correct any problems prior to re-starting the boiler.
9. Qualified service personnel should thoroughly inspect the heating system and correct any problems prior to re-starting the boiler.
10. Perform combustion analysis and readjust as necessary according to ***Table 3.11.2*** and *Section 3.11.2*. It is recommended that a copy of this report is filed for future reference.
11. Perform a leak test of the gas valves in accordance with the manufacturer's instructions.

5.2 Cleaning the Burner & Combustion Chamber

Harsco Industrial, Patterson-Kelley recommends cleaning the burner and combustion chamber at least once annually:

1. Lockout/tagout gas supply to the boiler.
2. Lockout/tagout electrical power to the boiler.
3. Disconnect the condensate neutralization tank piping in order to install a temporary drain hose into the condensate drain. Run the open end of this hose to a nearby floor drain.
4. Open the front and side doors of the boiler.
5. Protect the electrical and control components from exposure to water with towels, a nylon tarp, or plastic wrap.
6. Remove the wires/cables from the ignition electrode and flame/ionization rod.
7. Locate the blower and burner transition pieces located directly in the front of the boiler. Refer to *Section 6.2* for an illustration of these components.
8. Remove the nuts and bolts connecting the blower transition piece to the burner transition piece. The blower transition piece will remains supported in place.
9. Remove the nuts holding the burner transition piece to the studs on the front of the boiler.
10. Pull out the burner transition piece with the 2 gaskets and set aside.

11. Carefully remove the burner from the boiler and clean with pressurized water. **NOTE:** Do not attempt to wash the burner while installed in the boiler. When cleaning the burner, use a mild detergent such as Simple Green to help loosen built-up debris trapped in the burner mesh.
12. Now that the burner is removed, the burner hole is open which provides access to the combustion chamber.
13. Use a pressurized water hose with control nozzle. Begin by spraying just a few seconds of water into the combustion chamber and then close off the nozzle.
14. Walk around to the rear of the boiler and ensure the wash water is draining into the temporary drain hose off the condensate drain. Adjust the temporary drain hose if needed to help drain the wash water from the boiler.
15. After inspecting the temporary drain hose, continue washing the internal combustion chamber with pressurized water for several minutes. Spray as much of the internal surface area as possible. **BE VERY CAREFUL** when cleaning to avoid spraying any of the electrical or control components.
16. Some SONIC boiler models feature two small washout ports between the upper combustion chamber and lower economizer. The plugs in these ports can be removed for additional access to the fireside surfaces. If necessary, continue washing the fireside surfaces through these two washout ports.
17. After several minutes of washing, turn off the hose and allow all the wash water to drain from the boiler.
18. Reinstall the plugs into the two washout ports (if applicable).
19. Reconnect the condensate tubing to the condensate neutralization tank.
20. Reinstall the gasket over the boiler's threaded studs, and **CAREFULLY** insert the burner into the burner hole. Support the burner so it remains horizontal while inserting.
21. Once the burner is installed, reinstall the gasket over the burner's flange.
22. Reinstall the burner transition piece (and lower gasket) and bolt to the burner flange.
23. Once secured to the burner flange, bolt the burner transition piece to the blower transition piece. Ensure the gasket between the burner transition piece and blower transition piece is in place.
24. Reinstall the ignition electrode assembly (if previously removed).
25. Reinstall the flame/ionization rod assembly (if previously removed).
26. Reinstall the wires/cables to the ignition electrode and flame/ionization rod.
27. Double check the tightness of all bolted joints.

5.3 After Repairs or Maintenance

Following any major repairs or preventative maintenance, follow the steps below before returning the boiler to service.

1. Follow "Pre-Start Check List" (Refer to *Section 3.8*) and all "Safety Checks" (Refer to *Section 3.9*).
2. Check the gas pressure (Refer to *Section 3.11.2*) and ensure proper operation of the boiler.
3. Perform combustion check (Refer to *Section 3.11.2*) and adjust air/gas mixture at high fire & low fire if the O_2% or CO_2% are out of range.

NOTE: ***Installation and service must be performed by a qualified installer or service agency that has been trained on the Harsco Industrial, Patterson-Kelley boiler.***

NOTICE!
Once the boiler begins the ignition sequence, the firing sequence will continue until main flame is reached regardless of heat request. The sequence can be interrupted by turning the power switch off.

⚠ WARNING

If any "Manual Reset" limit device trips, DO NOT reset without determining and correcting the cause. Manual Reset Limits include: Flame safeguard, high or low gas pressure, high temperature limit, stack temperature, low water level. Attempting to operate a boiler without diagnosing the cause of failure can result in unsafe operation, increasing the risk of injury. Never attempt to bypass a safety limit device.

5.4 Sequence of Operation

1. When the Boiler On/Off switch is turned on, power is provided through over-current protection (fuse and/or circuit breaker) to the boiler control and the combustion blower.

2. When the outlet water temperature drops below "CH SETPOINT" minus "CH DIFFERENTIAL ON", a heat request is generated.

3. Provided all limits are made and the remote enable signal (if installed) is active, the boiler will attempt to start.

4. The NURO control checks to make sure air pressure switch is open indicating there is no airflow through the boiler. The combustion blower is then driven towards the pre-start fan speed. When the air pressure switch closes, the "PRE PURGE TIME" timer is started. Once the "PRE PURGE TIME" timer expires, the blower is driven to the ignition speed.

5. A trial for ignition begins and the sequence of events is illustrated graphically below in ***Figure 5.4***. A valid flame signal must be detected within 4 seconds after the gas valves open (elapsed time 7 seconds).

6. After a successful ignition, the fan is driven to low fire and the "CH LOW FIRE HOLD TIME" timer is started. Once the "LOW FIRE HOLD TIME" timer expires, the boiler is released to modulation.

7. The NURO control modulates the firing rate between low and high fire to maintain the desired outlet water temperature.

8. The burner will continue firing until the outlet water temperature exceeds "CH SETPOINT" plus "CH DIFFERENTIAL OFF". At this temperature, the gas valves are closed combustion air fan continues to run until the "POST PURGE TIME" timer has expired.

9. When the outlet water temperature is reduced by the load on the system, a heat request is generated. The operating sequence will recycle to *Step 3*.

Figure 5.4

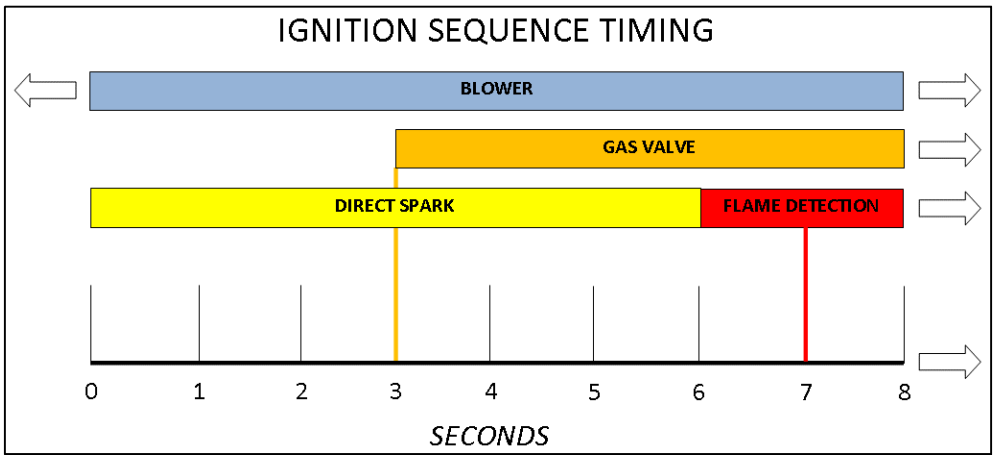

5.5 Troubleshooting

The NURO control will display graphical and/or text based error descriptions to announce any problems with the boiler. There are two types of lockouts: manual reset lockouts which require the operator to physically press the on-screen or device's reset button, and automatic reset lockouts which will self reset when the error condition clears. For a comprehensive list of errors and potential resolutions, please refer to the NURO Advanced User's Guide.

Should the unit fail to operate, call a qualified service technician to troubleshoot the problem and implement corrective actions.

5.5.1 Loss of Power

In the event of a power failure, the NURO touch screen will go dark and the entire boiler will de-energize. The signal relays used to command auxiliary devices connected to the boiler (air dampers, pumps, etc.) will also lose power, so these devices will deactivate. When power is restored, the sequence of operation will resume at Step 3 (*Section 5.4*). If any error/lockout errors were present at the time of the power failure, the NURO control will retain that error/lockout when power is restored.

5.5.2 Loss of Water Level

The low water switch opens when there is an insufficient water level in the boiler. The NURO control will display 10010: **"Low Water Limit"**, close the gas valve, and lock the boiler out. When the water level is corrected and the on-screen reset button is pressed, the boiler will reset and resume the sequence of operation at Step 3 (*Section 5.4*)

5.5.3 Low Gas Pressure

The low gas pressure switch opens when there is (or has been) insufficient gas pressure available for proper operation of the boiler. If an external gas-supply shut-off valve is closed for any reason, a low gas condition will result. The NURO control will display 10012: **"Low Gas Limit"**, close the gas valve, and lock the boiler out. When proper gas pressure is restored, and the on-screen reset button is pressed, the boiler will reset and resume the sequence of operation at Step 3 (*Section 5.4*).

5.5.4 High Gas Pressure

The high gas pressure switch opens when there is (or has been) excessive gas pressure for the proper operation of the boiler. The NURO control will display 10011: **"High Gas Limit"**, close the gas valve, and lock the boiler out. When proper gas pressure is restored, and the on-screen reset button is pressed, the boiler will reset and resume the sequence of operation at Step 3 (*Section 5.4*).

5.5.5 High Water Temperature

When the boiler water has exceeded both the operating temperature limit and the manual reset high-temperature limit, the NURO control will display 10009: **"High Temperature Limit"**, close the gas valve, and lock the boiler out. When the water temperature falls below the high-limit temperature setting, the boiler will remain locked out until the water high-temperature limit switch is manually reset and the on-screen reset button is pressed. Once reset, the control will resume the sequence of operation at Step 3 (*Section 5.4*)

5.5.6 Low Air

If the NURO control displays either 65: **"Interrupted Airflow Switch OFF"** or 66: **"Interrupted Airflow Switch ON"**, this indicates improper airflow through the boiler. First, verify proper standby blower operation – when the boiler is in "Standby", the blower should also be in standby.

Next, check for obstructions of the combustion air intake and/or exhaust (flue) piping. Next, check the hoses leading to the air switches are not kinked or obstructed. An error related to the air switch does not necessarily mean that the air switch is defective.

When 66: **"Interrupted Airflow Switch ON"** is displayed, check that the air switch is open when the blower is offline. Ensure there is no air flow through the boiler when the blower is offline. An excessive negative draft in the flue piping can cause air flow through the offline boiler which may be strong enough to maintain closure of the air switch.

When 65: **"Interrupted Airflow Switch OFF"** is displayed, check that the air switch is closed when the blower is running. If the air switch does not close within 5 minutes during purge, the boiler locks out. Check that the burner is clean ("Cleaning the Burner," *Section 5.2*) and that there are no obstructions to airflow in the intake or exhaust ducts.

5.5.7 Flame Failure

In the event of a flame failure, the NURO control may display one of the following error messages:

- 106: **"Flame Lost in Main Flame Establish Period"**
- 107: **"Flame Lost Early in Run"**
- 108: **"Flame Lost in Run"**
- 109: **"Ignition Failed"**
- 110: **"Ignition Failure Occurred"**

When 109: **"Ignition Failed"** or 110: **"Ignition Failure Occurred"** is displayed, the boiler did not light during the trial for ignition. Check that the ignition electrode, ignition wire, and gas valve are functioning properly. Check that the direct spark ignition is visible through the flame observation port during the trial for ignition.

When 106: **"Flame Lost in Main Flame Establish Period"**, 107: **"Flame Lost Early in Run"**, or 108: **"Flame Lost in Run"** is displayed, the boiler lost the flame signal during operation. Check that combustion is adjusted properly, the gas pressure is correct, and the ignition electrode, ignition wire, and gas valve are functioning properly.

5.5.8 Flame Error

In the event of a flame error (premature or late flame signal), the NURO control will display 105: **"Flame Detected Out of Sequence"**. This may be caused by a failed/leaky gas valve or a flame rod or ionization rod malfunction. If gas valve leakage is suspected, the unit must be isolated by turning off the main gas supply line. Lockout/tagout the boiler until qualified and knowledgeable service personnel are available to evaluate and repair or replace the failed parts. Check that the incoming gas pressures have not exceeded 14" w.c. (1/2 psig).

5.5.9 Flue Problem

When the normally-closed high exhaust back pressure switch opens, the NURO control will display 10013: **"High Back Pressure Limit"**. This may be caused by an obstruction in the flue piping, an obstruction in the combustion air intake, or a blocked condensate system. When the blockage is removed, the boiler will automatically restart. If no blockage is found, it may be necessary to replace the high exhaust back pressure switch.

⚠ WARNING

Use of Non-Factory Authorized replacement parts are not recommended for this equipment. All control components are engineered for safety and are designed to work in unison with each of the other components. Use of non-factory authorized replacement parts jeopardizes the functionality of the safety features as well as the performance of the boiler.

6 Parts/Tech Support

Spare parts and replacement parts can be ordered from Harsco Industrial, Patterson-Kelley by calling toll free (877) 728-5351. Reach us by fax at (570) 476-7247.

Refer to the parts list shown on the assembly drawings provided in this manual.

Technical information is also available by calling or visit the Harsco Industrial, Patterson-Kelly website, www.harscopk.com.

When ordering replacement parts please have the model number and serial number of your boiler available.

Typical schematic drawings are shown on the following pages. Drawings specific to your particular boiler can also be supplied by your local Harsco Industrial, Patterson-Kelley representative.

6.1 Wiring Diagrams

6.1.1 Terminal Block Assignments – Power Box (SC-3000 & SC-4000 Only)

The power box is located in the front of the boiler, at the lower left corner. This power box houses the control transformer, fuses, the power box terminal strip circuit breakers, and the blower motor relay.

The three phase circuit breaker is mounted on DIN rail and allows for direct connection of the three power leads. The terminals on the circuit breaker can accommodate maximum 10AWG wire. There is an additional terminal on the DIN rail for a ground connection. Refer to the Ratings Nameplate on the back surface of the boiler to verify the required electrical supply prior to connection.

Figure 6.1.1 **Power Box Wiring Diagram (240V Configuration Shown)**

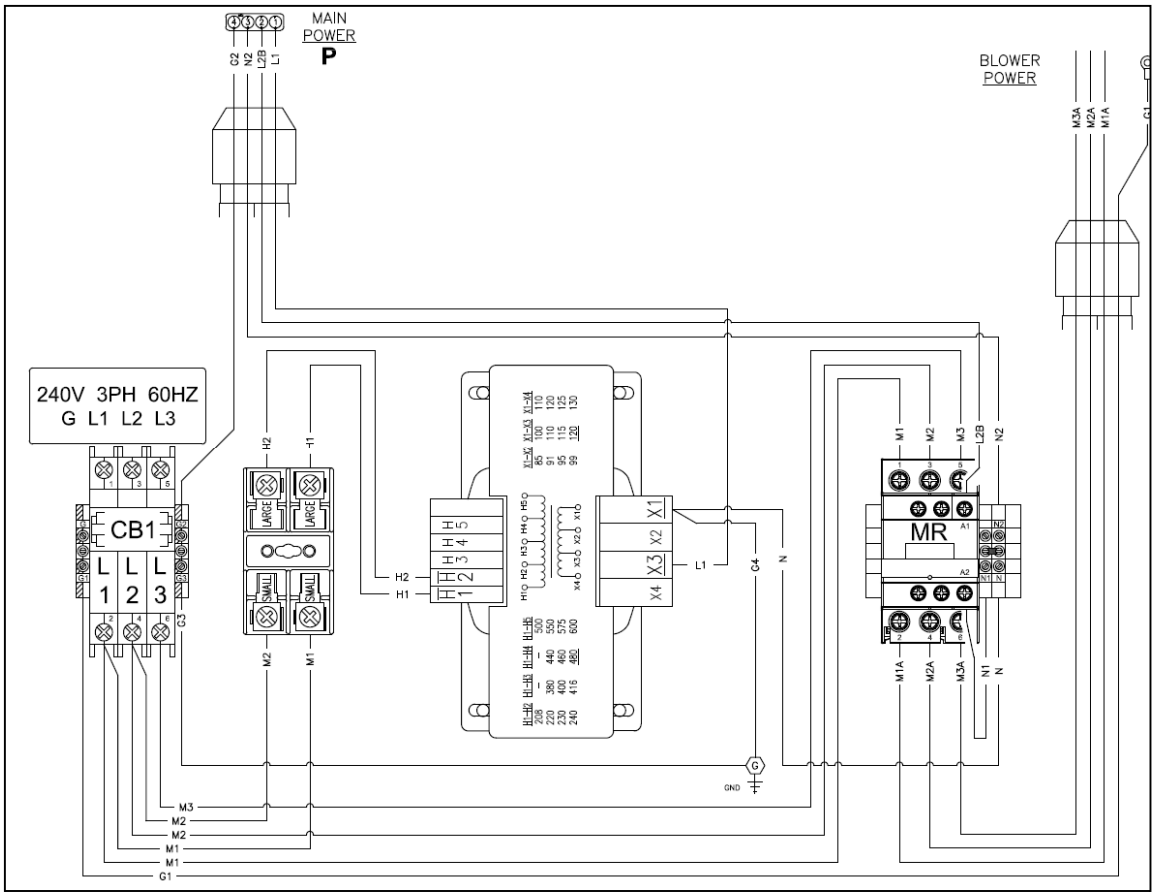

6.1.2 Terminal Block Assignments — High Voltage (TB2) Terminal Block

SC-2000 Terminal Number	SC-3000 SC-4000 Terminal Number	Label	Description
25	22	MASTER ALARM RELAY	Normally-Open Dry Contact, Close on Alarm (240VAC Max Voltage & 1/2Amp Max Current)
24	21	MASTER ALARM RELAY	
23	20	RELAY A	User-Configurable Normally-Open Dry Contact A (240VAC Max Voltage & 1/2Amp Max Current)
22	19	RELAY A	
21	18	RELAY B	User-Configurable Normally-Open Dry Contact B (240VAC Max Voltage & 1/2Amp Max Current)
20	17	RELAY B	
19	16	RELAY C	User-Configurable Normally-Open Dry Contact C (240VAC Max Voltage & 1/2Amp Max Current)
18	15	RELAY C	
17	14	RELAY D	User-Configurable Normally-Open Dry Contact D (240VAC Max Voltage & 1/2Amp Max Current)
16	13	RELAY D	
N/A	12	GROUND	Ground Terminals for I/O Devices
15	11	GROUND	
14	10	[120V+] AIR DAMPER	120VAC Pilot-Duty for Air Damper End Limit Switch Contact Closure When Air Damper Proven Open
13	9	AIR DAMPER INTERLOCK	
12	8	[120V+] AUXILIARY #1	Reserved for Future Use
11	7	AUXILIARY INPUT #1	
10	6	[120V+] AUXILIARY #2	Reserved for Future Use
9	5	AUXILIARY INPUT #2	
8	4	START INTERLOCK #1	External Interlock Circuit #1
7	3	START INTERLOCK #1	
6	2	START INTERLOCK #2	External Interlock Circuit #2 (In Series w/ #1)
5	1	START INTERLOCK #2	
4	***N/A***	GROUND	G1 for 208-240VAC, Single phase, 60Hz
3	***N/A***	NEUTRAL	N1 for 208-240VAC, Single phase, 60Hz
2	***N/A***	HOT L2	L2 for 208-240VAC, Single phase, 60Hz
1	***N/A***	HOT L1	L1 for 208-240VAC, Single phase, 60Hz

6.1.3 Terminal Block Assignments — Low Voltage (TB1) Terminal Block

Terminal Number	Label	Description
27	ECOM 3	Wireless Outdoor Air Receiver
26	ECOM 2	
25	ECOM 1	
24	MODBUS SHIELD	2-Wire MODBUS RS485 & Shield Terminal
23	MODBUS COM B	
22	MODBUS COM A	
21	MODBUS/CASCADE REF	Reference Terminal (Application Dependent)
20	CASCADE B TO B	2-Wire Cascade & Shield Terminal
19	CASCADE A TO A	
18	CASCADE SHIELD	
17	GROUND	Ground Terminal for I/O Devices
16	ANALOG OUTPUT [-]	4-20mA Analog Output Tracks Boiler Firing Rate 100% Firing Rate = 20mA, 1% Firing Rate = 4mA
15	4-20mA ANALOG OUTPUT [+]	
14	NIGHT SETBACK	Contact Closure Enables Night Setback Operation Open Circuit Disables Night Setback Operation
13	NIGHT SETBACK	
12	OUTDOOR TEMP SENSOR	Outdoor Air Temperature Sensor for ODA Reset Configurable for 10kΩ or 12kΩ Sensor
11	OUTDOOR TEMP SENSOR	
10	DHW STAT / SENSOR	DHW Enable Circuit Configurable for SPST Break-on-rise Aquastat, or 10kΩ or 12kΩ Tank Sensor
9	DHW STAT / SENSOR	
8	HDR TEMP SENSOR	Hydronic Supply Header Temperature Sensor Configurable for 10kΩ or 12kΩ Sensor
7	HDR TEMP SENSOR	
6	SPARE ANALOG INPUT	Reserved for Future Use
5	SPARE ANALOG INPUT	
4	ANALOG INPUT [-]	4-20mA Analog Input Configurable for Setpoint or Firing Rate Control
3	4-20mA ANALOG INPUT [+]	
2	ENABLE / DISABLE	Contact Closure Enables Comfort Heat Operation Open Circuit Disables Comfort Heat Operation
1	ENABLE / DISABLE	

6.1.4 SC-3000 & SC-4000 Control Transformer Diagrams

WARNING

Before making any electrical connections to the boiler, verify that the control transformer is properly configured for the applicable incoming power supply to the boiler:

- 208V, three phase, 60Hz
- 220-240V, three phase, 60Hz
- 440-480V, three phase, 60Hz

Improper configuration of the control transformer could result in serious injury or death.

Figure 6.1.4a **SC-3000 & SC-4000: 208 VAC, three phase, 60 hertz:**

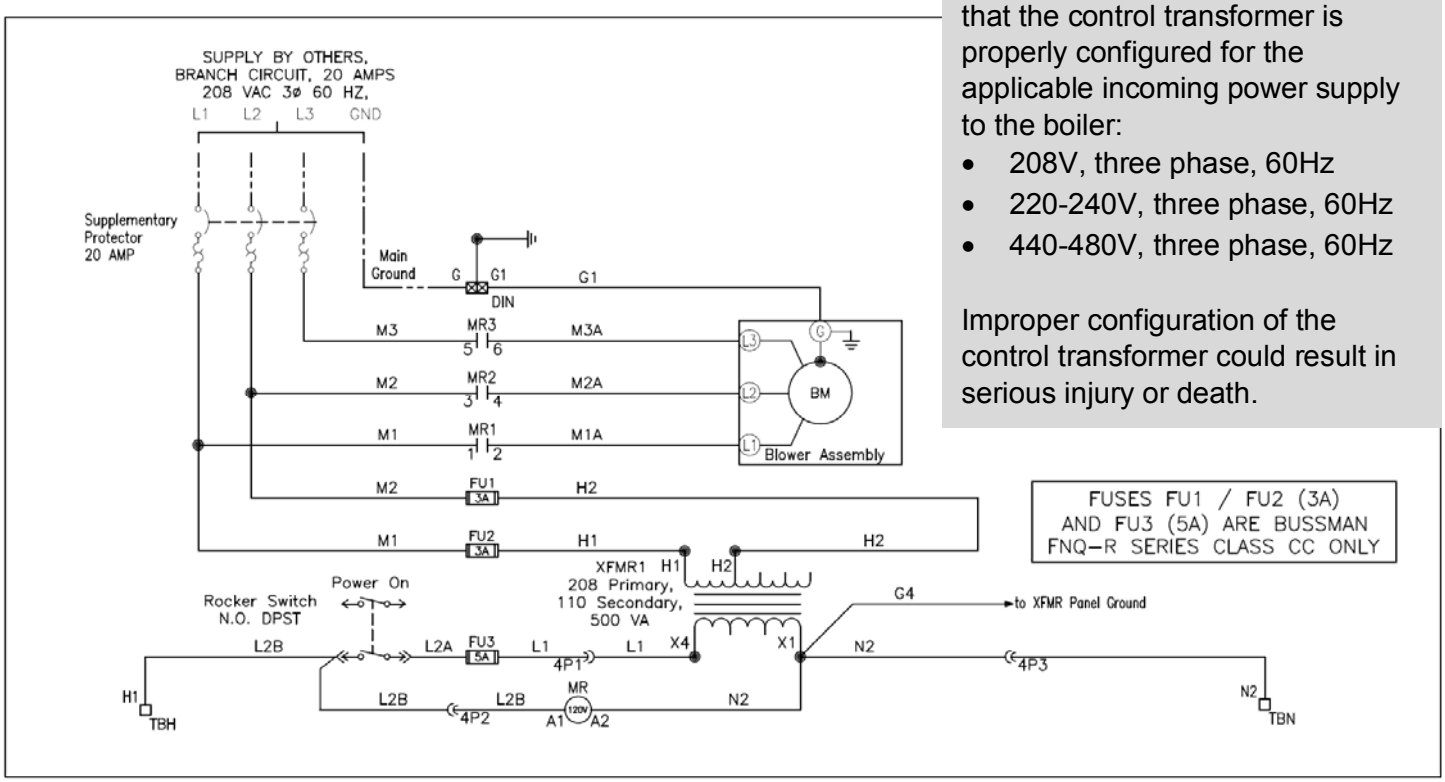

Figure 6.1.4b **SC-3000 & SC-4000: 220-240 VAC, three phase, 60 hertz:**

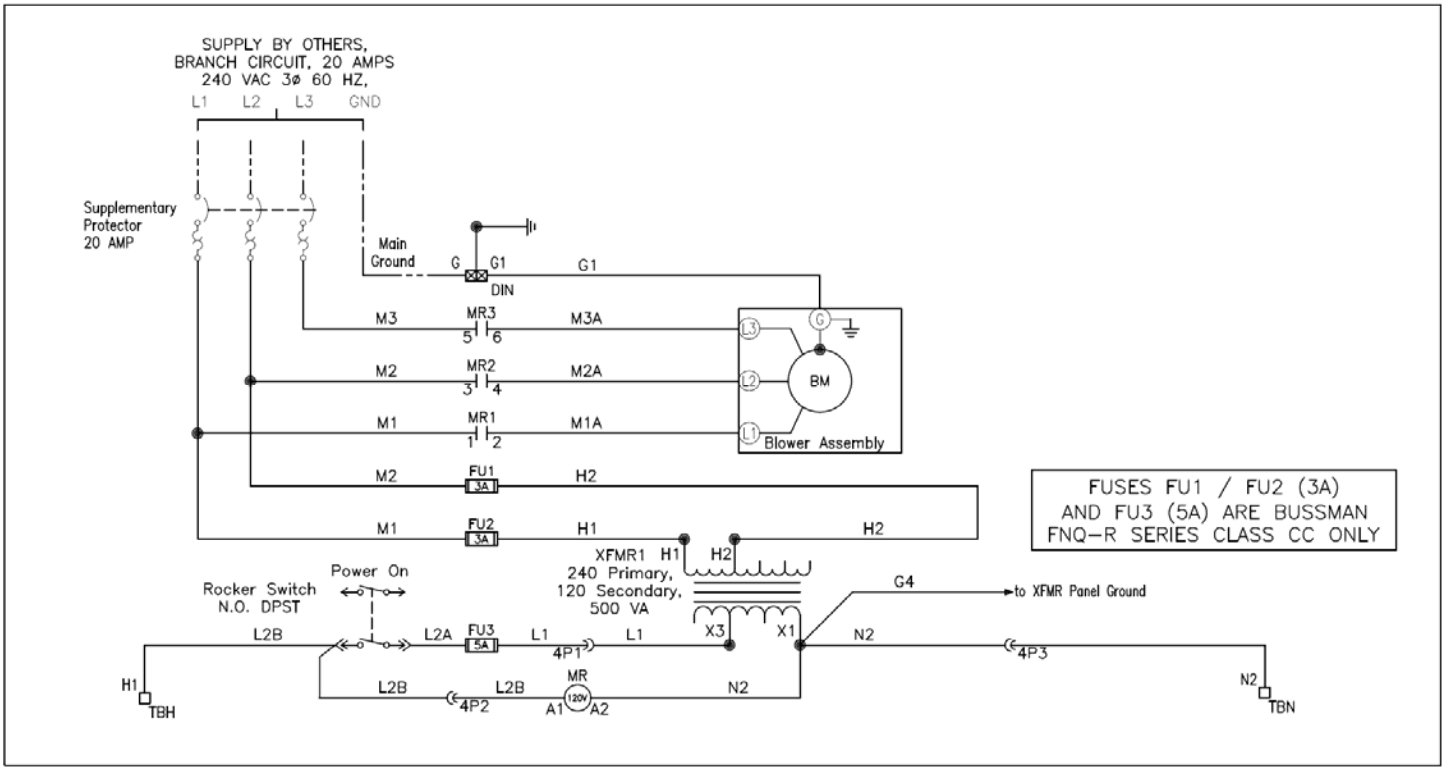

Figure 6.1.4c **SC-3000 & SC-4000: 440-480 VAC, three phase, 60 hertz:**

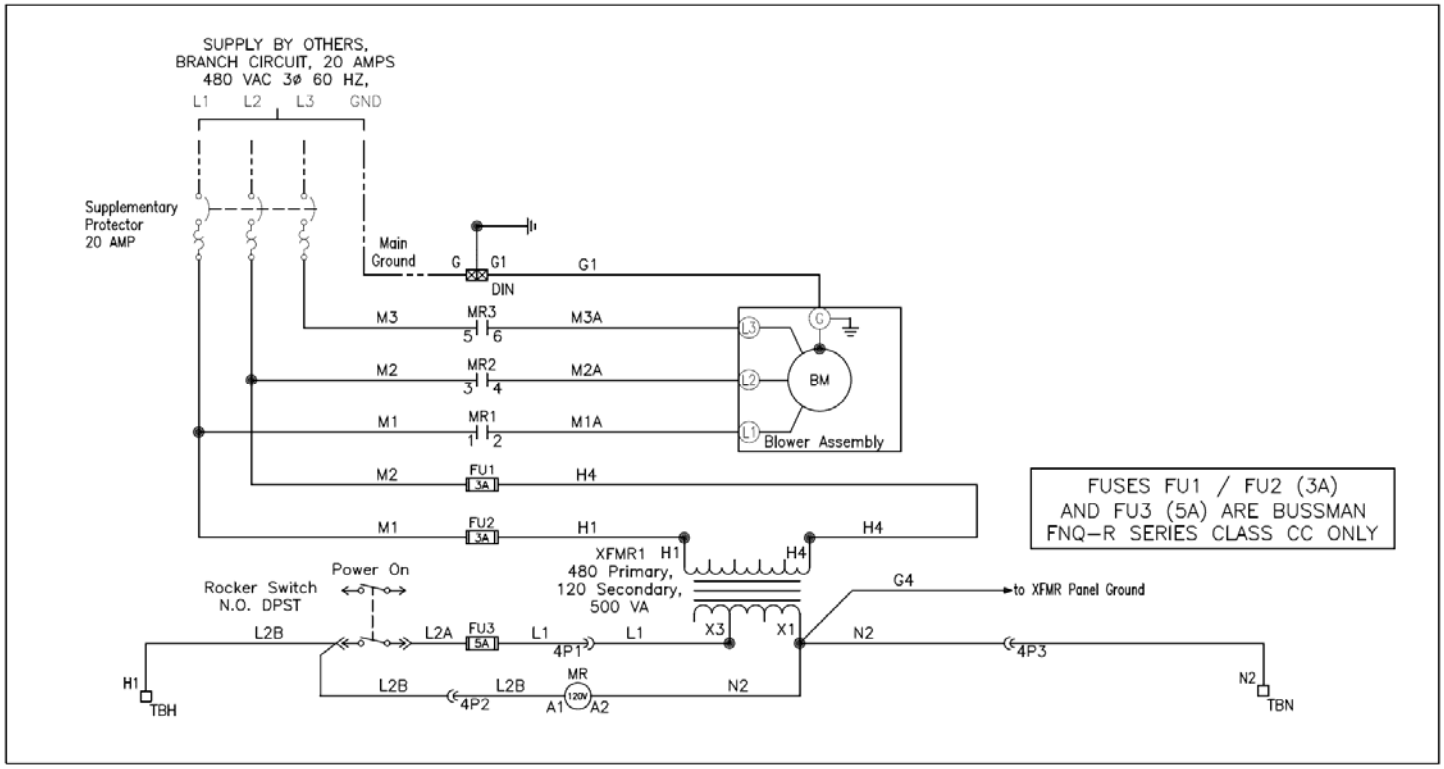

6.1.4 SC-2000 Wiring Diagram

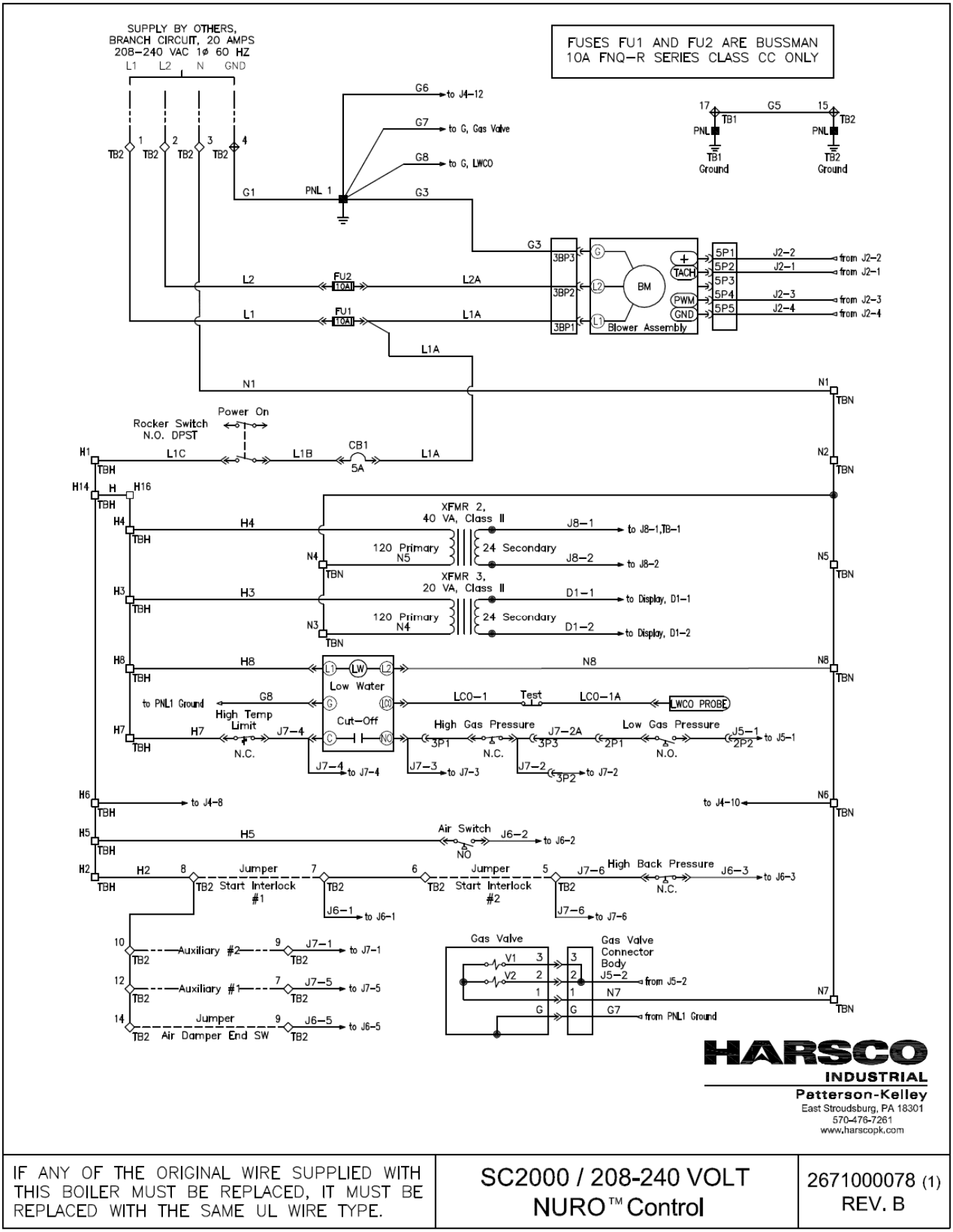

IF ANY OF THE ORIGINAL WIRE SUPPLIED WITH THIS BOILER MUST BE REPLACED, IT MUST BE REPLACED WITH THE SAME UL WIRE TYPE.	SC2000 / 208-240 VOLT NURO™ Control	2671000078 (1) REV. B

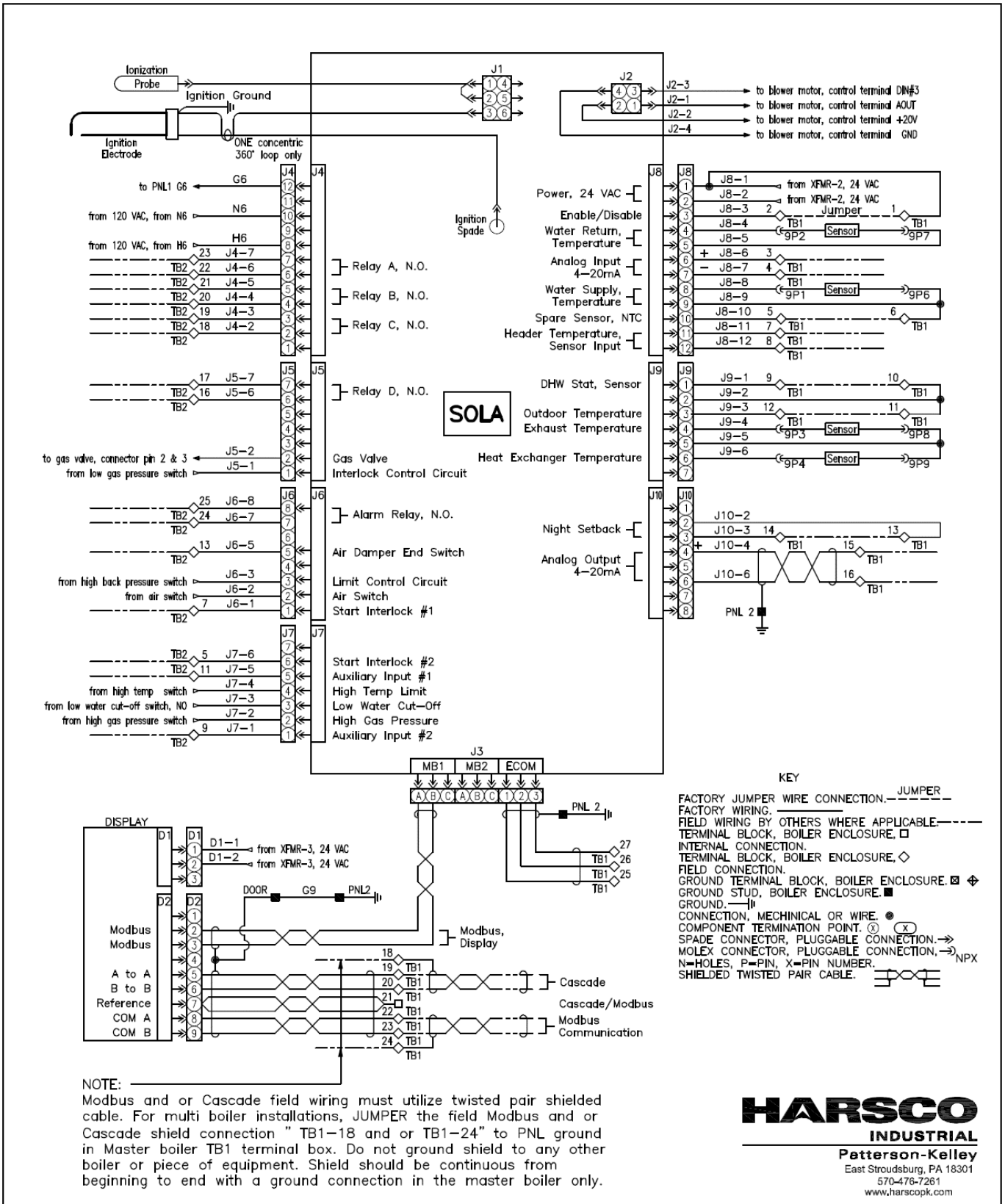

NOTE:
Modbus and or Cascade field wiring must utilize twisted pair shielded cable. For multi boiler installations, JUMPER the field Modbus and or Cascade shield connection " TB1-18 and or TB1-24" to PNL ground in Master boiler TB1 terminal box. Do not ground shield to any other boiler or piece of equipment. Shield should be continuous from beginning to end with a ground connection in the master boiler only.

HARSCO INDUSTRIAL
Patterson-Kelley
East Stroudsburg, PA 18301
570-476-7261
www.harscopk.com

IF ANY OF THE ORIGINAL WIRE SUPPLIED WITH THIS BOILER MUST BE REPLACED, IT MUST BE REPLACED WITH THE SAME UL WIRE TYPE.	SC2000 / 208-240 VOLT NURO™ Control	2671000078 (2) REV. B

6.1.5 SC-3000 & SC-4000 240V Wiring Diagram

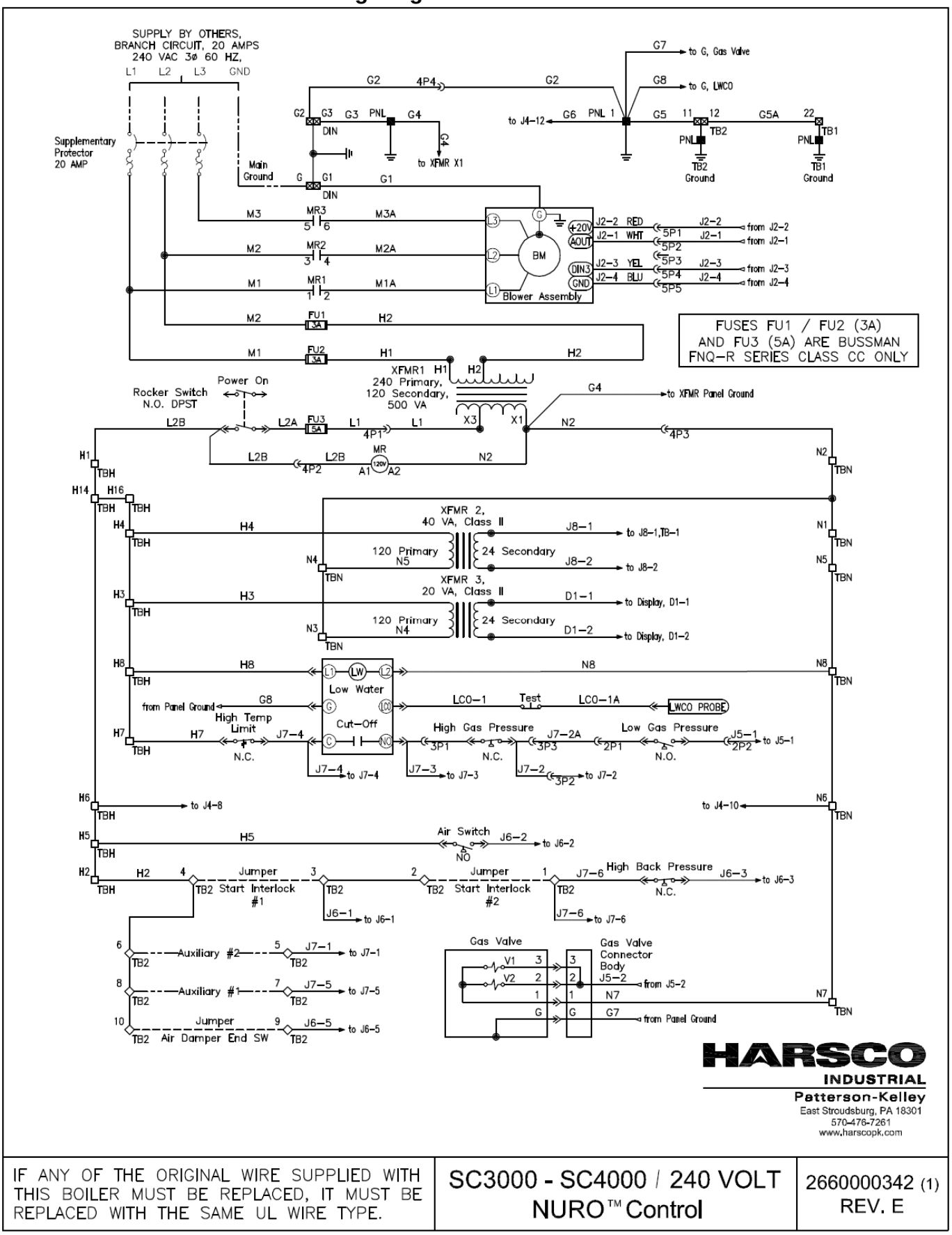

IF ANY OF THE ORIGINAL WIRE SUPPLIED WITH THIS BOILER MUST BE REPLACED, IT MUST BE REPLACED WITH THE SAME UL WIRE TYPE.	SC3000 - SC4000 / 240 VOLT NURO™ Control	2660000342 (1) REV. E

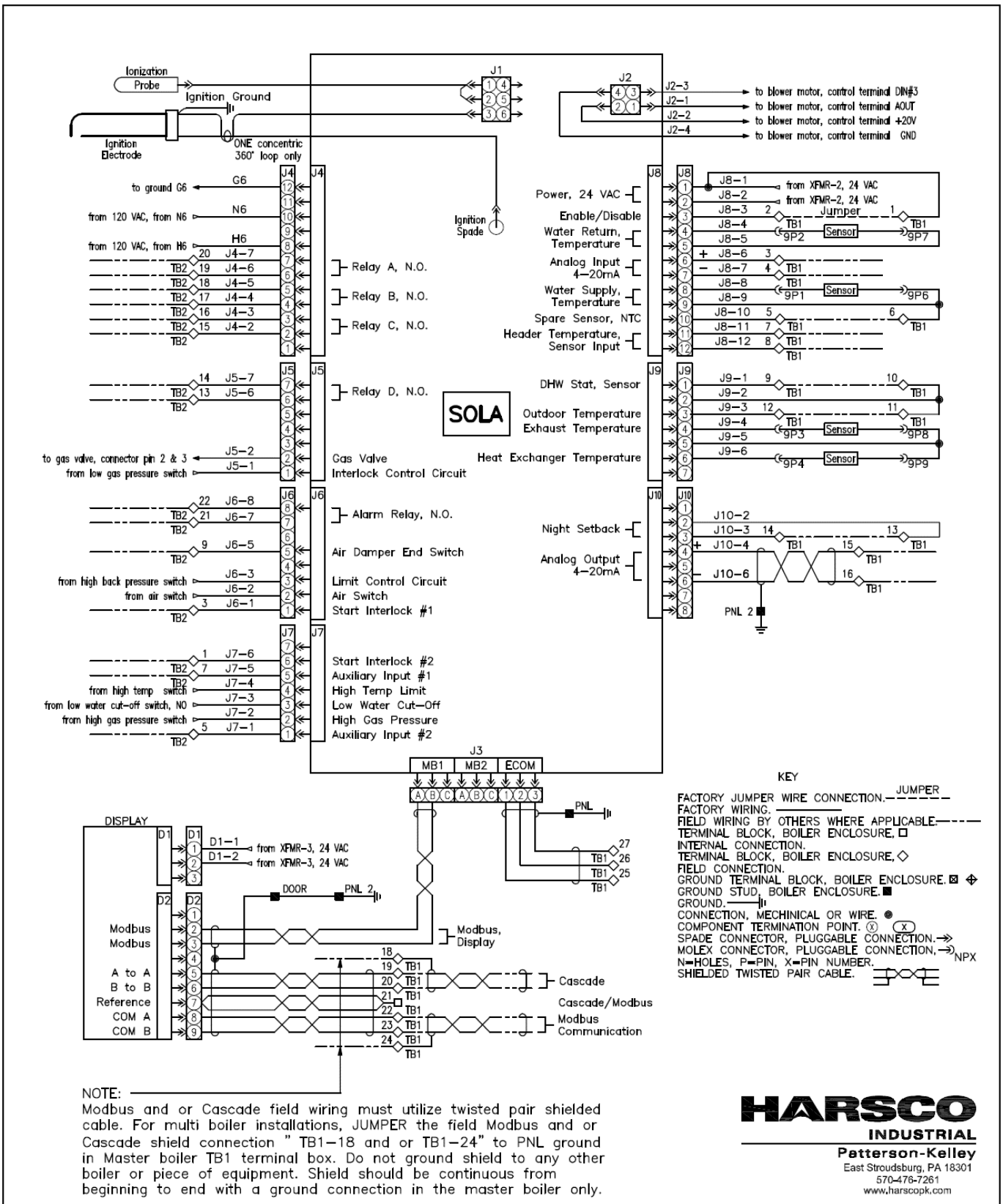

NOTE:
Modbus and or Cascade field wiring must utilize twisted pair shielded cable. For multi boiler installations, JUMPER the field Modbus and or Cascade shield connection " TB1-18 and or TB1-24" to PNL ground in Master boiler TB1 terminal box. Do not ground shield to any other boiler or piece of equipment. Shield should be continuous from beginning to end with a ground connection in the master boiler only.

HARSCO INDUSTRIAL
Patterson-Kelley
East Stroudsburg, PA 18301
570-476-7261
www.harscopk.com

IF ANY OF THE ORIGINAL WIRE SUPPLIED WITH THIS BOILER MUST BE REPLACED, IT MUST BE REPLACED WITH THE SAME UL WIRE TYPE.	SC3000 - SC4000 / 240 VOLT NURO™ Control	2660000342 (2) REV. E

6.1.6 SC-3000 & SC-4000 480V Wiring Diagram

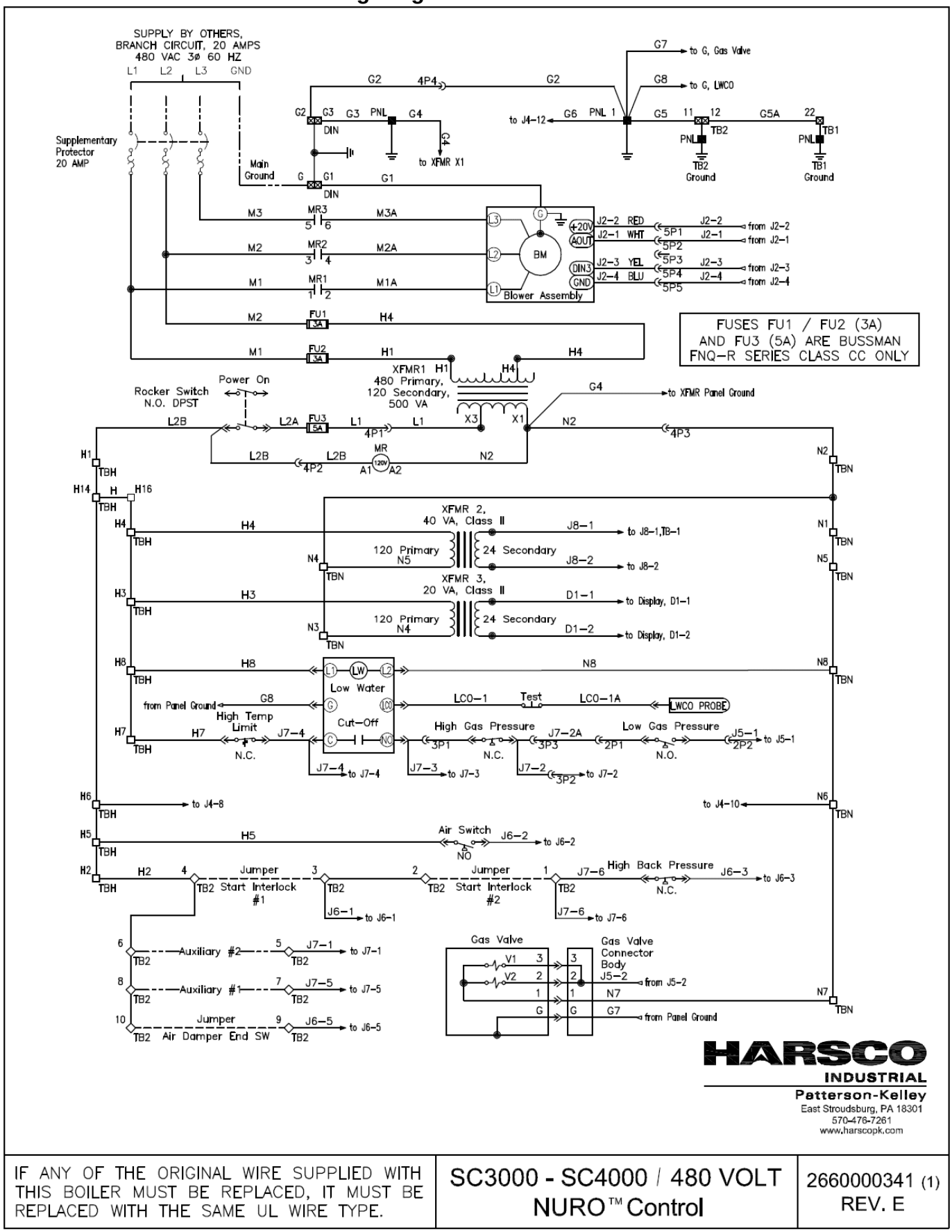

IF ANY OF THE ORIGINAL WIRE SUPPLIED WITH THIS BOILER MUST BE REPLACED, IT MUST BE REPLACED WITH THE SAME UL WIRE TYPE.	SC3000 - SC4000 / 480 VOLT NURO™ Control	2660000341 (1) REV. E

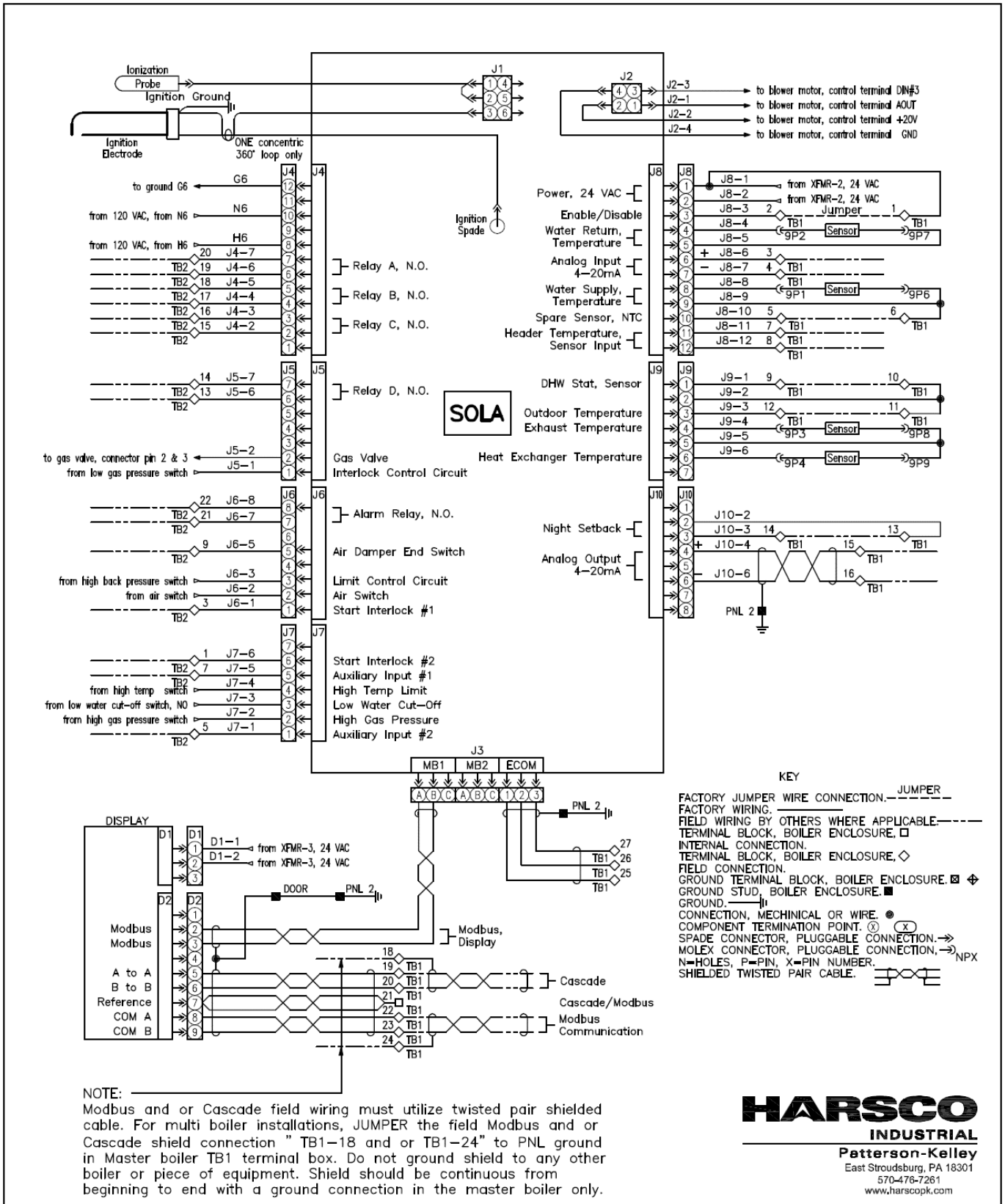

NOTE:
Modbus and or Cascade field wiring must utilize twisted pair shielded cable. For multi boiler installations, JUMPER the field Modbus and or Cascade shield connection " TB1-18 and or TB1-24" to PNL ground in Master boiler TB1 terminal box. Do not ground shield to any other boiler or piece of equipment. Shield should be continuous from beginning to end with a ground connection in the master boiler only.

HARSCO INDUSTRIAL
Patterson-Kelley
East Stroudsburg, PA 18301
570-476-7261
www.harscopk.com

IF ANY OF THE ORIGINAL WIRE SUPPLIED WITH THIS BOILER MUST BE REPLACED, IT MUST BE REPLACED WITH THE SAME UL WIRE TYPE.	SC3000 - SC4000 / 480 VOLT NURO™ Control	2660000341 (2) REV. E

6.2 Boiler Parts Identification (SC-2000)

6.2.1 Main Boiler Assembly (SC-2000)

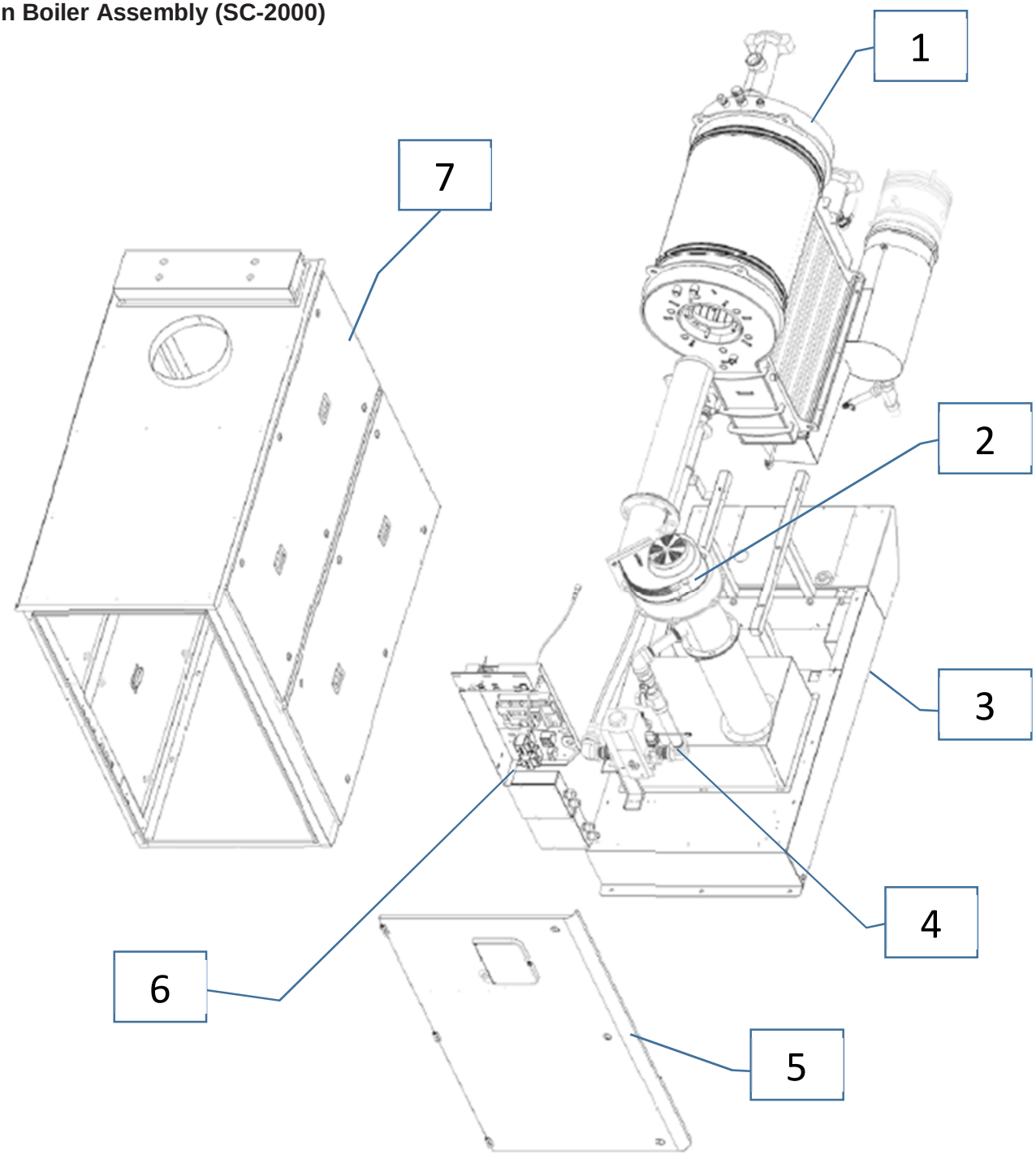

Mark	Description		Mark	Description
1	Heat Exchanger		5	Front Door / NURO Touchscreen
2	Burner/Blower Assembly		6	NURO Control Panel
3	Cabinet Base		7	Sheet Metal Cabinet
4	Natural Gas Train			

6.2.2 NURO Control Panel (SC-2000)

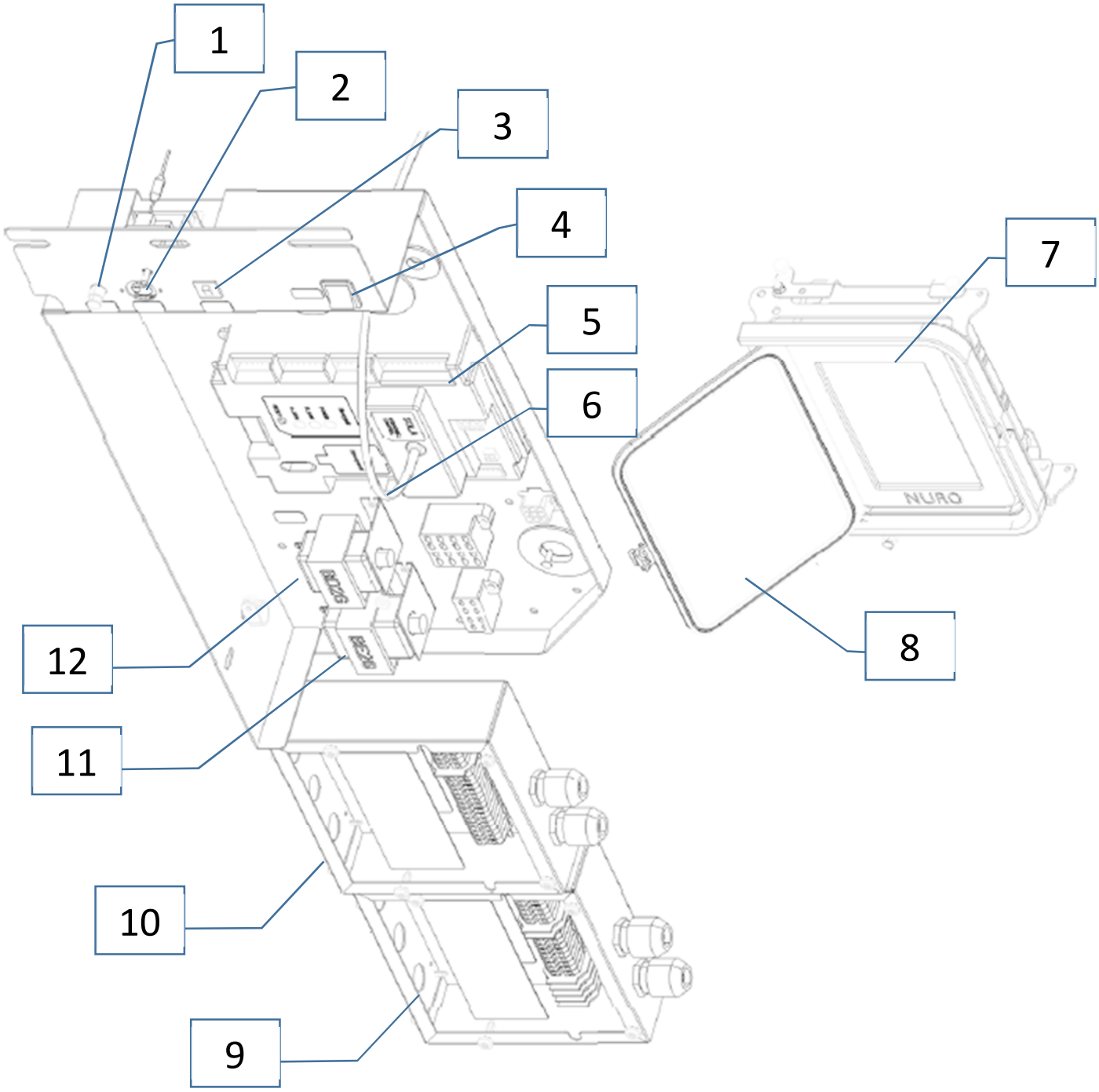

Mark	Description		Mark	Description
1	Push to Test LWCO Button		7	NURO Touchscreen Assembly
2	Manual Reset Hi Temp Limit		8	Clear Plastic Protective Cover
3	Circuit Breaker		9	High Voltage (TB2) Terminal Block
4	On/Off Switch		10	Low Voltage (TB1) Terminal Block
5	SOLA Mainboard		11	Transformer XFMR2 (40VA)
6	Ignition Cable		12	Transformer XFMR1 (20VA)

6.2.3 Heat Exchanger Assembly (SC-2000)

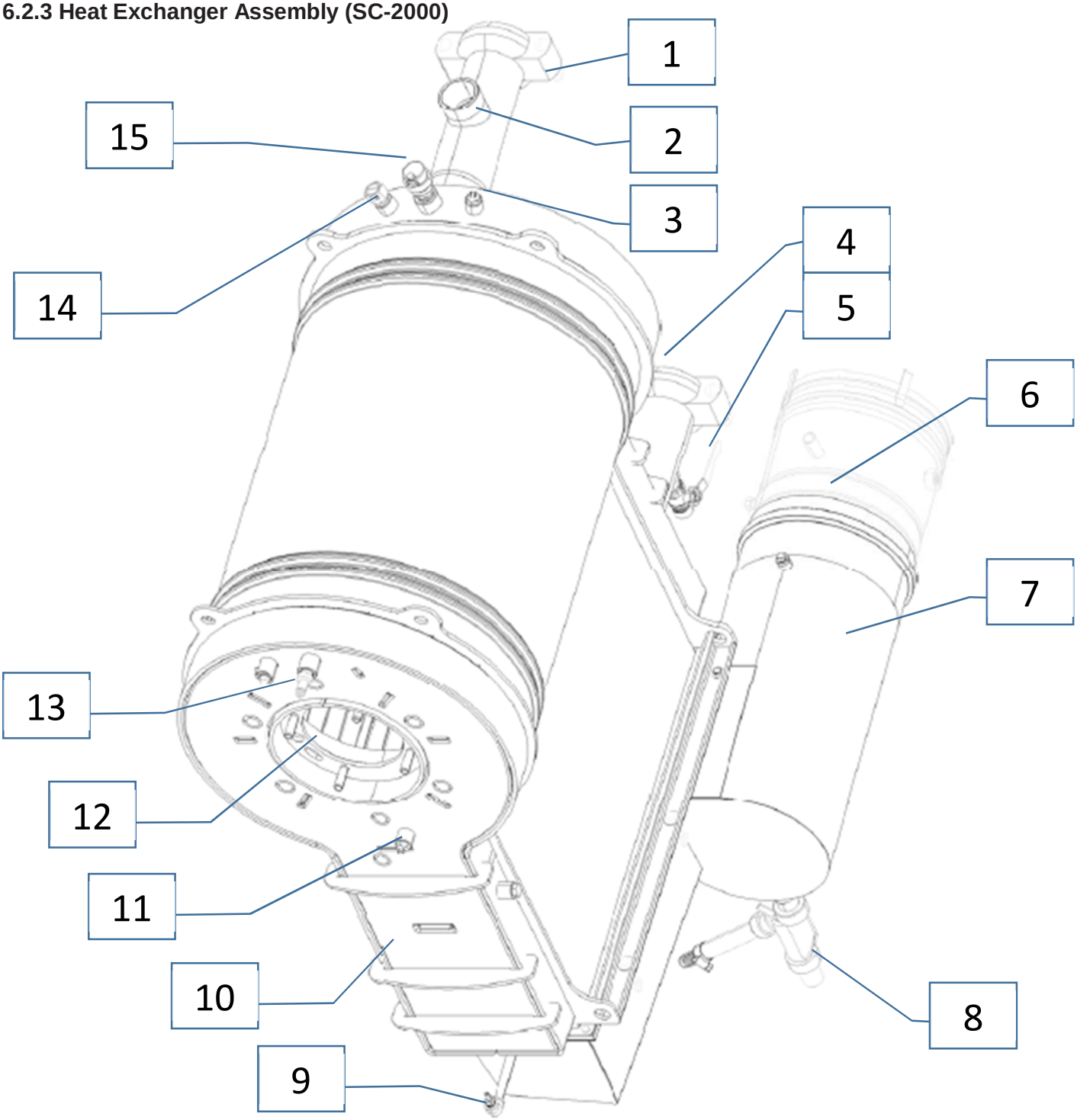

Mark	Description		Mark	Description
1	Outlet Coupling (3” Victaulic)		9	High Exhaust Pressure Switch Port
2	Relief Valve Port		10	Heat Exchanger
3	Supply Temperature Sensor		11	Heat Exch. Temperature Sensor
4	Inlet Coupling (3” Victaulic)		12	Burner Flange / Hole
5	Manual Drain Valve		13	Low Water Cutoff Probe
6	10” Flue Adapter		14	Manual Reset High Limit Probe
7	Condensate Pan		15	Automatic Air Vent
8	Condensate Trap			

6.2.4 Natural Gas Train, Burner & Blower Assembly (SC-2000)

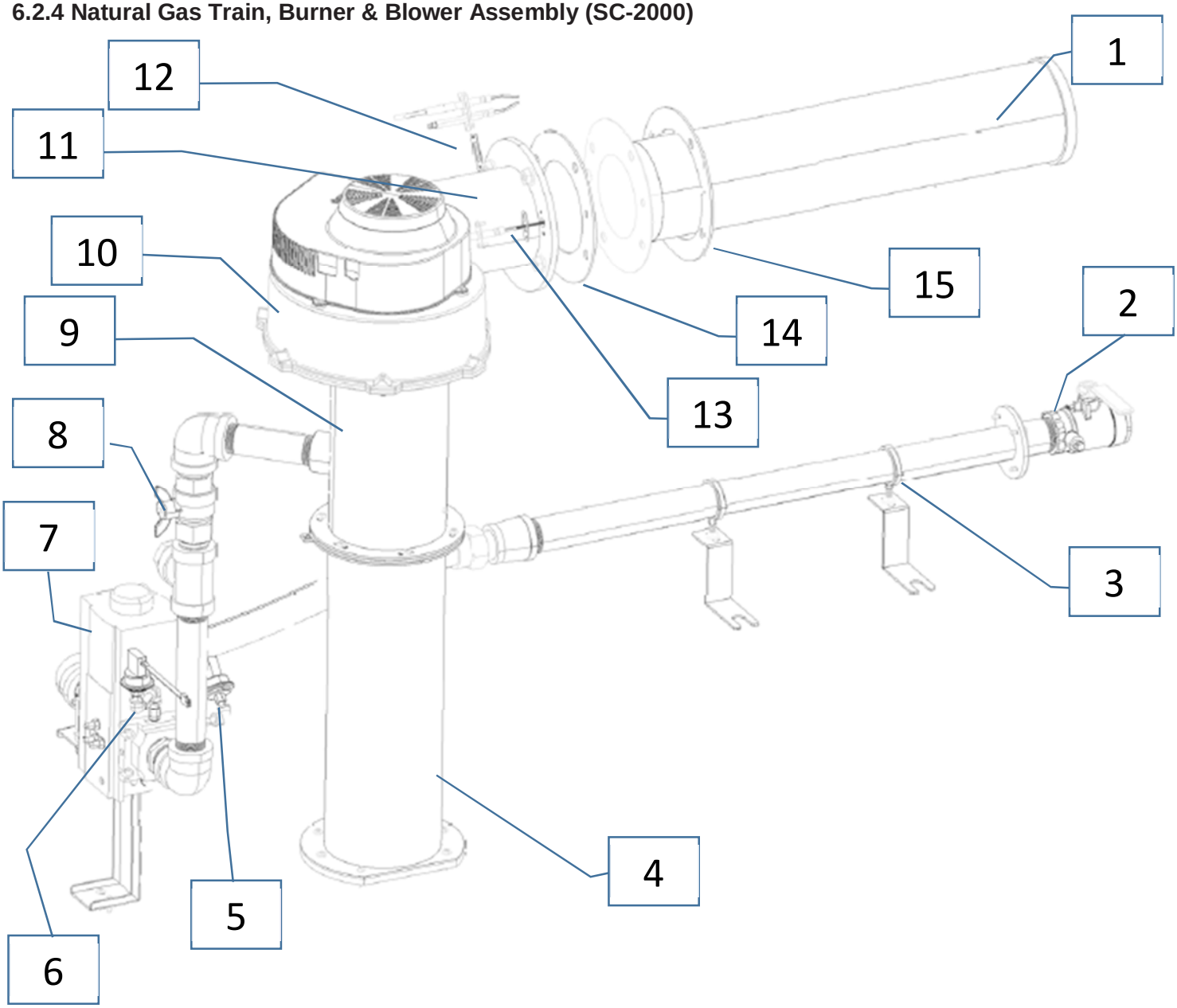

Mark	Description		Mark	Description
1	Stainless Steel Mesh Burner		9	Blower Transition Piece
2	External (Upstream) Gas Cock		10	Combustion Blower / Fan
3	Gas Piping & Supports		11	Burner Transition Piece
4	Air Intake Transition Piece		12	Ignition Electrode & Gasket
5	Low Gas Pressure Switch		13	Flame/Ionization Rod & Gasket
6	High Gas Pressure Switch		14	Outer Burner Gasket
7	Main Gas Shutoff/Control Valve		15	Inner Burner Gasket
8	Internal (Downstream) Gas Cock			

6.3 Boiler Parts Identification (SC-3000 & SC-4000)

6.3.1 Main Boiler Assembly (SC-3000 & SC-4000)

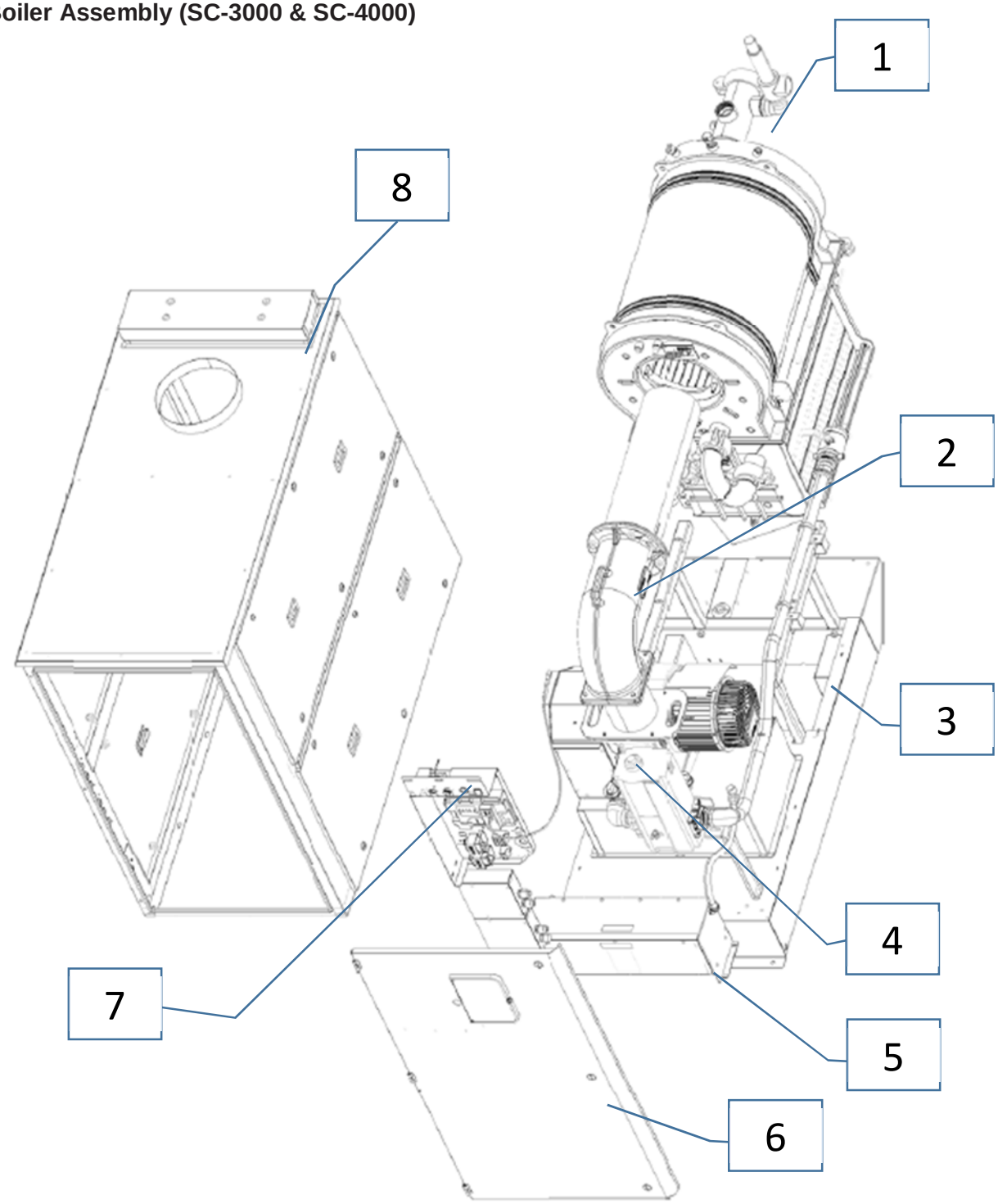

Mark	Description		Mark	Description
1	Heat Exchanger		5	Main Power Box
2	Burner/Blower Assembly		6	Front Door / NURO Touchscreen
3	Cabinet Base		7	NURO Control Panel
4	Natural Gas Train		8	Sheet Metal Cabinet

6.3.2 NURO Control Panel (SC-3000 & SC-4000)

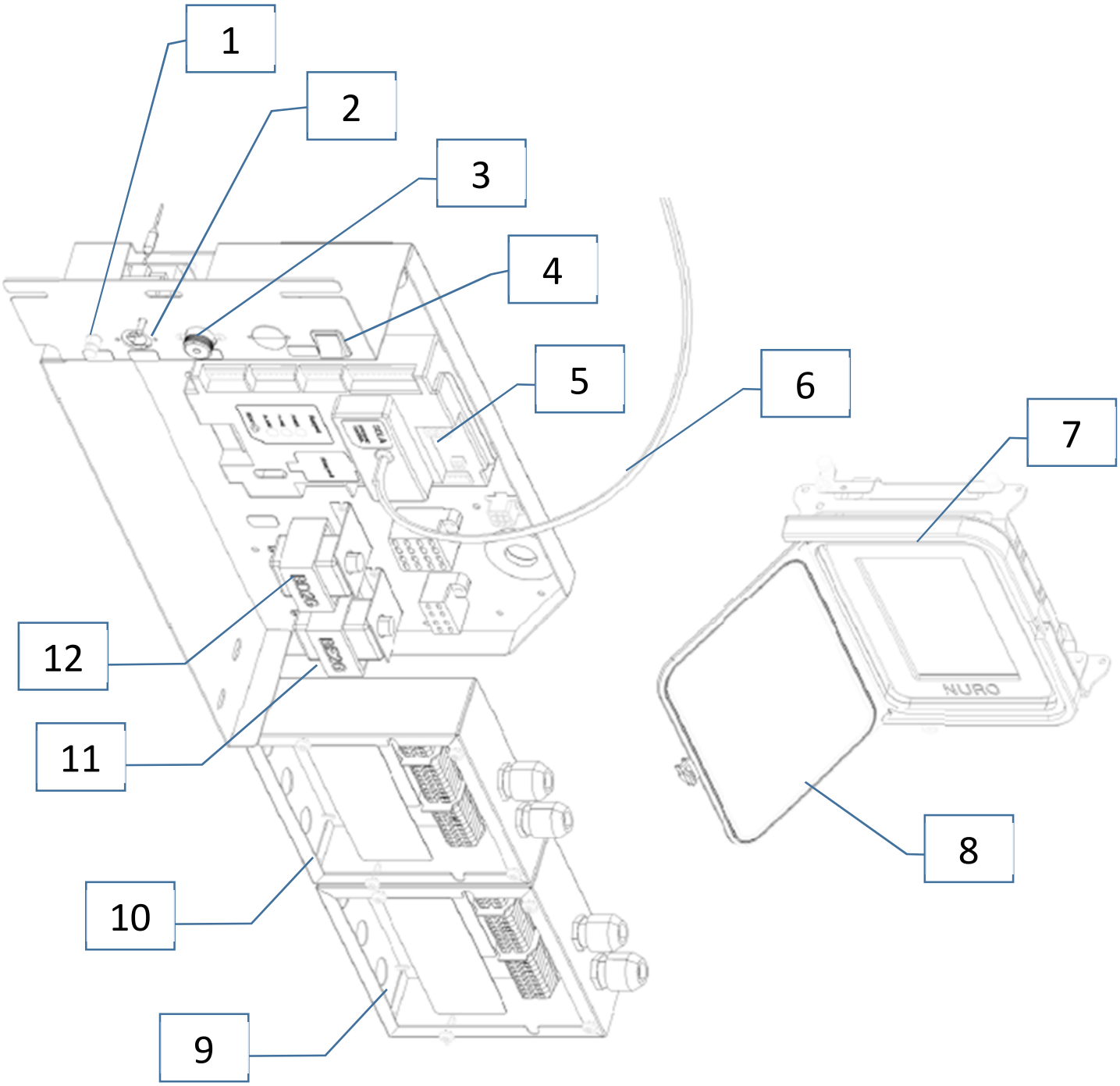

Mark	Description		Mark	Description
1	Push to Test LWCO Button		7	NURO Touchscreen Assembly
2	Manual Reset Hi Temp Limit		8	Clear Plastic Protective Cover
3	Fuse Holder & Fuse		9	High Voltage (TB2) Terminal Block
4	On/Off Switch		10	Low Voltage (TB1) Terminal Block
5	SOLA Mainboard		11	Transformer XFMR2 (40VA)
6	Ignition Cable		12	Transformer XFMR1 (20VA)

6.3.3 Main Power Box (SC-3000 & SC-4000)

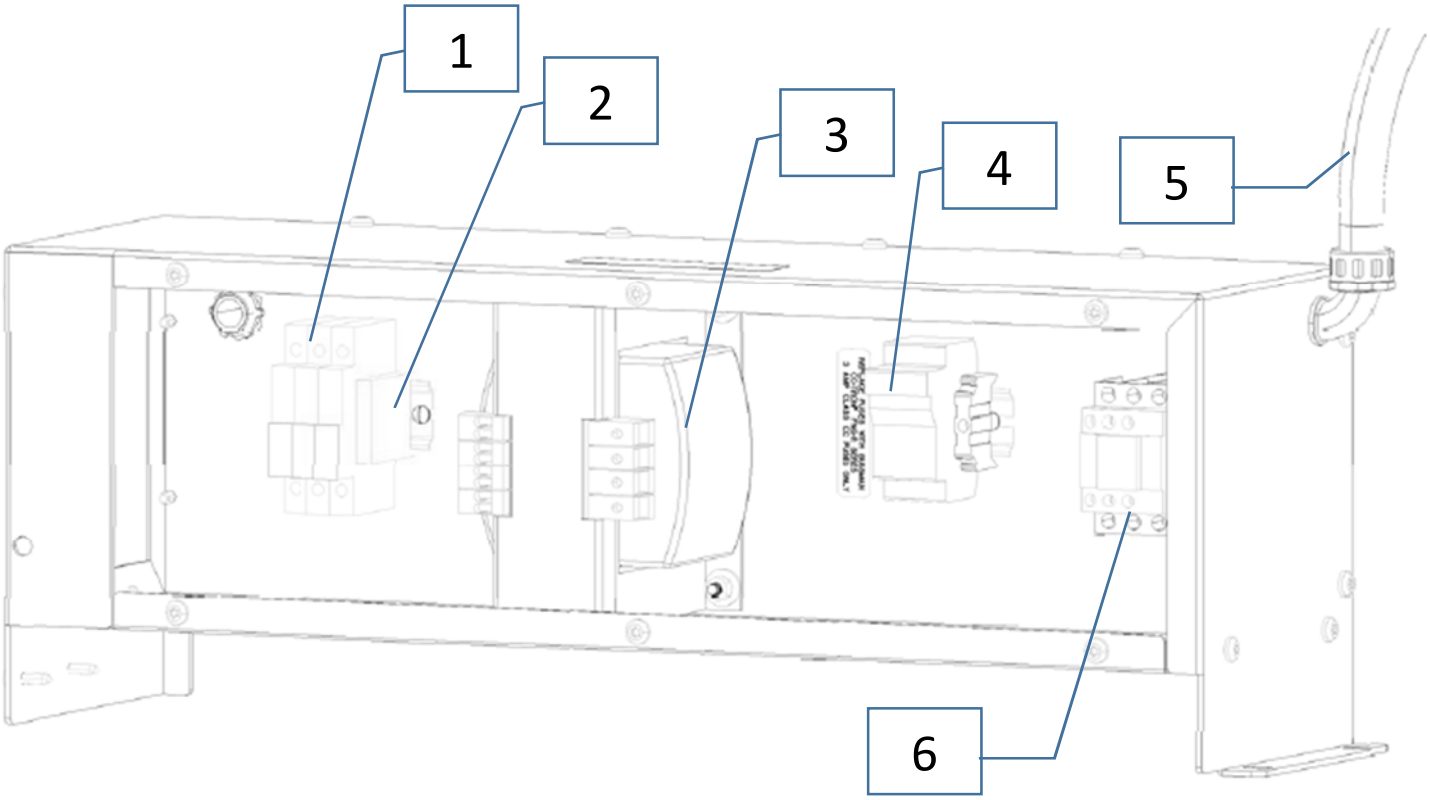

Mark	Description		Mark	Description
1	20A Three Phase Breaker (Incoming Three Phase Power)		4	Fuse Holder
2	Grounding Terminal		5	Power Lead to Blower Motor
3	Control Transformer		6	Blower Motor Relay

6.3.4 Heat Exchanger Assembly (SC-3000 & SC-4000)

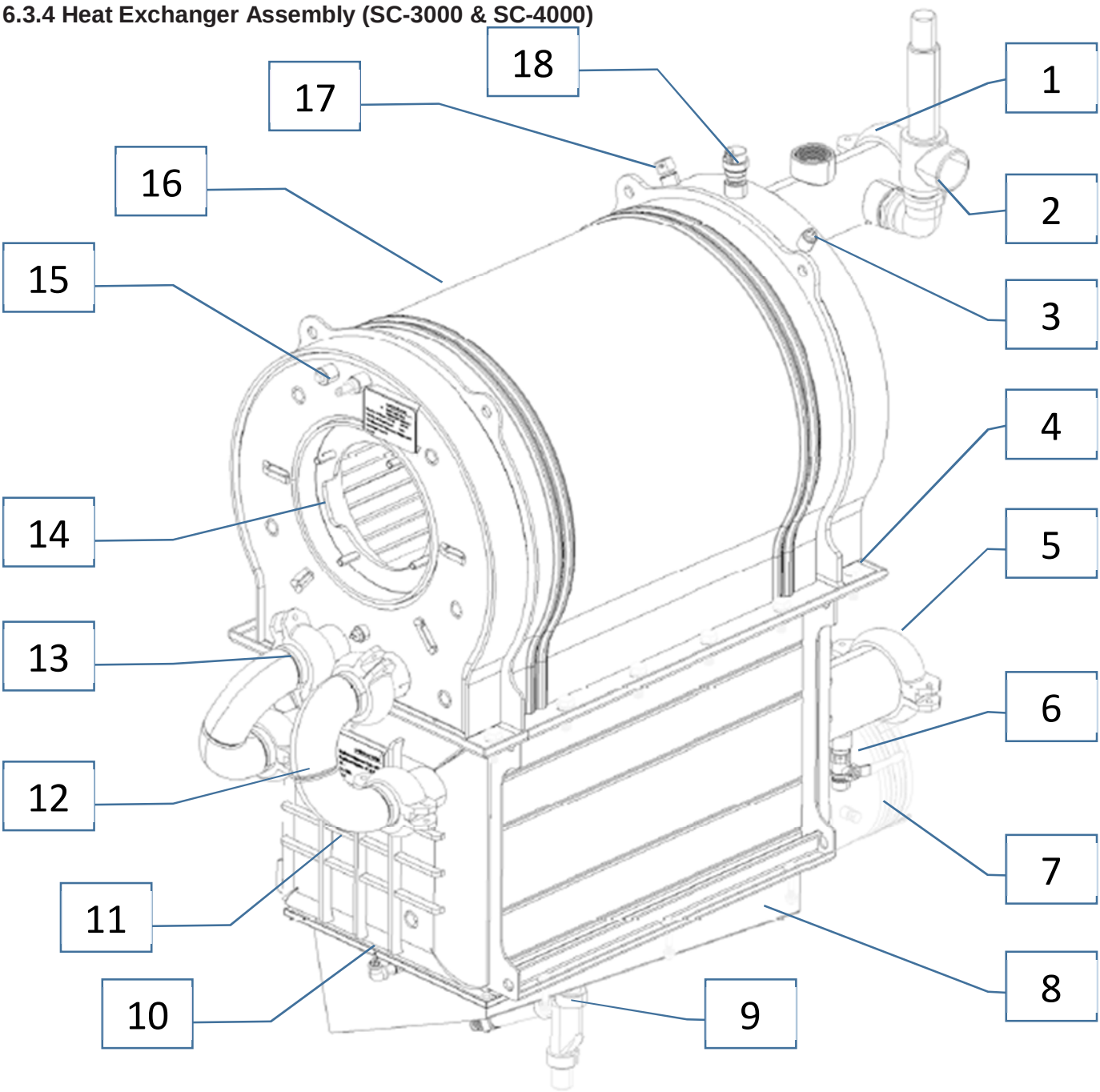

Mark	Description		Mark	Description
1	Outlet Coupling (4” Victaulic)		10	High Exhaust Pressure Switch Port
2	ASME Section VIII Relief Valve (150#)		11	Section VIII Economizer
3	Supply Temperature Sensor		12	Interconnecting Elbows
4	Nuts/Bolts		13	Internal Couplings (2-1/2” Victaulic)
5	Inlet Coupling (4” Victaulic)		14	Burner Flange / Hole
6	Manual Drain Valve		15	Low Water Cutoff Probe
7	10” Flue Adapter		16	Section IV Boiler
8	Condensate Pan		17	Manual Reset High Limit Probe
9	Condensate Trap		18	Automatic Air Vent

6.3.5 Natural Gas Train, Burner & Blower Assembly (SC-3000 & SC-4000)

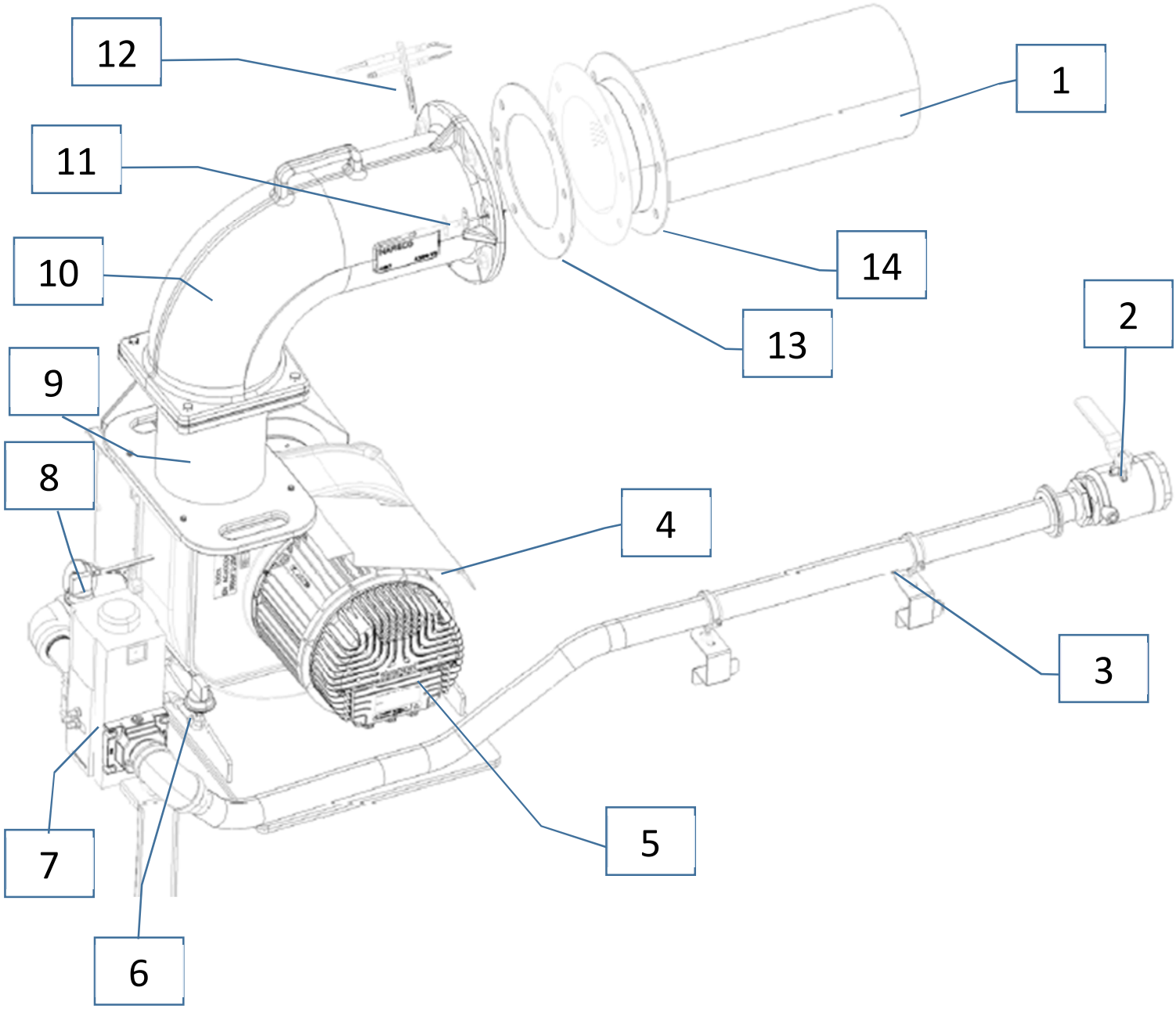

Mark	Description		Mark	Description
1	Stainless Steel Mesh Burner		8	High Gas Pressure Switch
2	External (Upstream) Gas Cock		9	Blower Transition Piece
3	Gas Piping & Supports		10	Burner Transition Piece
4	Blower Motor Splash Guard		11	Flame/Ionization Rod & Gasket
5	Combustion Blower / Fan		12	Ignition Electrode & Gasket
6	Low Gas Pressure Switch		13	Outer Burner Gasket
7	Main Gas Shutoff/Control Valve		14	Inner Burner Gasket

6.3.6 Propane Gas Train (SC-3000 & SC-4000)

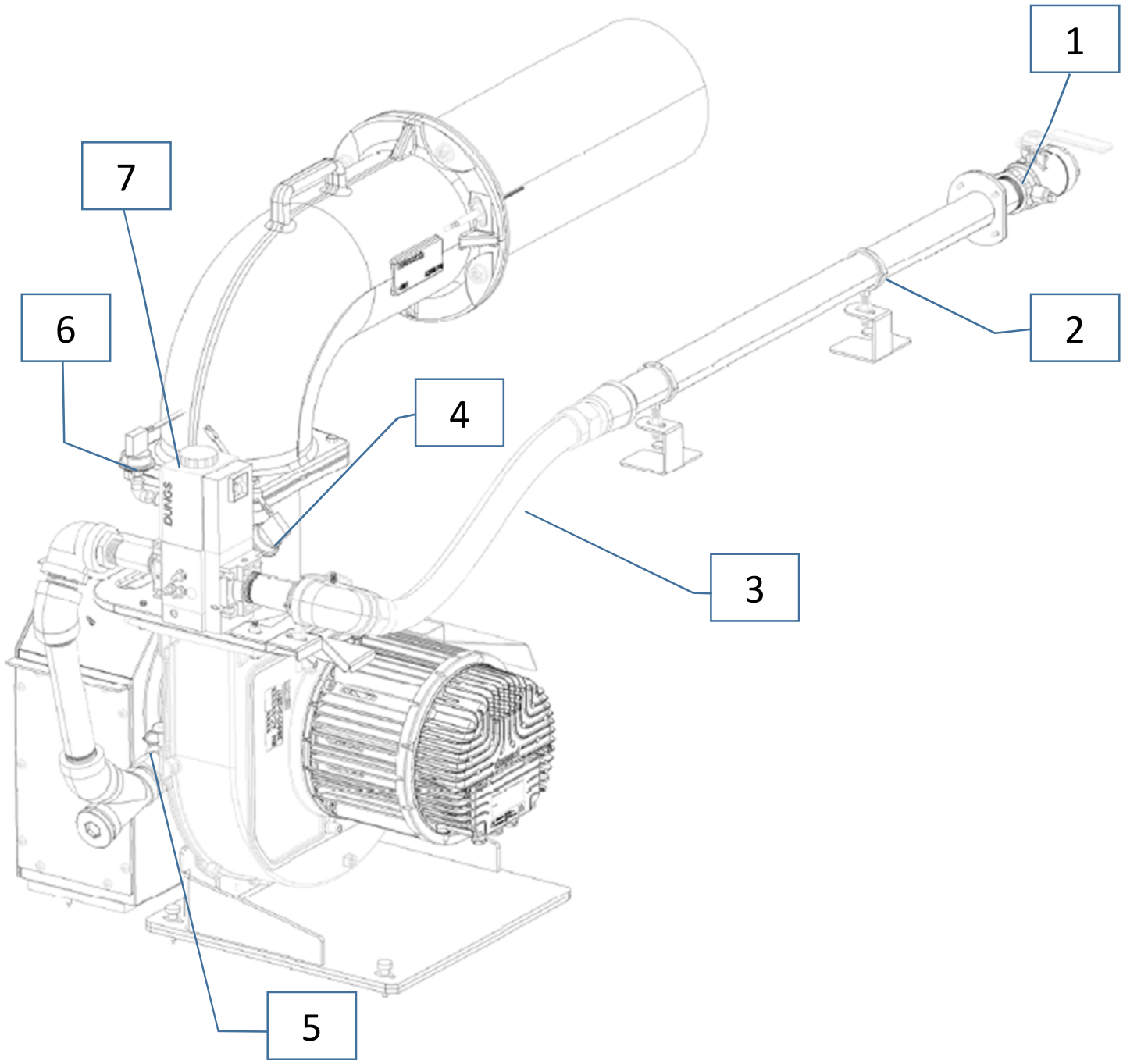

Mark	Description		Mark	Description
1	External (Upstream) Gas Cock		5	Internal (Downstream) Gas Cock
2	Gas Piping & Supports		6	High Gas Pressure Switch
3	Flexible Gas Hose		7	Main Gas Shutoff/Control Valve
4	Low Gas Pressure Switch			

7 Limited Warranty

LIMITED WARRANTY
Subject to the terms and conditions herein, Harsco Industrial, Patterson-Kelley, Seller, warrants to the original owner at the original installation site that products manufactured by Seller will be free from defects in materials and workmanship for a period of one (1) year from date of start up (the "Warranty Period"), provided that start up is completed within six months from the date of shipment. The heat exchanger and burner will be warranted for a period of five (5) years and a ten (10) year warranty against failure due to thermal shock from the date of shipment (the "Warranty Period").

REMEDY
The sole remedy of this warranty is expressly limited to the repair or replacement of any part found to be defective under conditions of normal use within the Warranty Period. Installation is not included.

WARRANTY
The owner must notify the original installer of the Product and Seller (Attention: Harsco Industrial, Patterson-Kelley, 100 Burson Street, East Stroudsburg, PA 18301), in writing, within the Warranty Period, providing a detailed description of all claimed defects. Transportation to the factory or other designated facility for repairs of any products or items alleged defective shall, in all events, be the responsibility and at the cost of the owner.

EXCLUSIONS
Seller shall have no liability for and this warranty does not cover:

1) Incidental, special or consequential damages, such as loss of the use of products, facilities or production, inconvenience, loss of time or labor expense involved in repairing or replacing the alleged defective Product.
2) The performance of any Product under conditions varying materially from those under which such Product is usually tested under industry standards at of the time of shipment
3) Any damage to the Product due to abrasion, erosion, deterioration, abnormal temperatures or the influence of foreign matter or energy.
4) The design or operation of owner's plant or equipment or of any facility or system of which any Product may be made a part.
5) The suitability of any Product for any particular application.
6) Any failure resulting from misuse, modification not authorized by Seller in writing, improper installation or lack of or improper maintenance.
7) Equipment furnished by the owner, either mounted or unmounted, or when contracted for by the owner to be installed or handled.
8) Leakage or other malfunction caused by:
    i) Defective installations in general and specifically, any installation which is made:
        (a) In violation of applicable state or local plumbing housing or building codes,
        (b) Contrary to the written instructions furnished with the unit
    ii) Adverse local conditions in general and, specifically, sediment or lime precipitation in the tubes and/or headers or corrosive elements in the atmosphere.
    iii) Misuse in general and, specifically, operation and maintenance contrary to the written instructions furnished with the unit, disconnection, alteration or addition of components or apparatus, not approved by Seller, operation with fuels or settings other than those set forth on the rating plate or accidental or exterior damage.
9) Production of noise, odors, discoloration or rusty water.
10) Damage to surrounding area or property caused by leakage or malfunction.
11) Costs associated with the replacement and/or repair of the unit including: any freight, shipping or delivery charges, any removal, installation or reinstallation charges, any material and/or permits required for installation, reinstallation or repair, charges to return the boiler and or components. Seller's liability under this warranty shall not in any case exceed the amount paid for the Product found to be defective.

THIRD-PARTY WARRANTIES
For goods or components not manufactured by Seller, the warranty obligations of Seller shall, in all respects, conform and be limited to one (1) year from the date of shipment.

SEVERABILITY
To the extent that any provision of this warranty would be void or prohibited under applicable law, such provisions shall be limited in effect to the minimum extent necessary to render the remaining provisions hereof enforceable.

NO OTHER WARRANTIES
Seller makes no implied warranty of merchantability or fitness for a particular purpose or other warranties with respect to any products or services except as expressly set forth in this limited warranty.

Boiler Fire-Test Report

P-K SONIC® BOILER
FIRE TEST / START-UP REPORT

Boiler Serial #: _____ Model#: _____ Date: _____

Installation Name: _____ Address: _____ City: _____

State: _____ Zip: _____ Contact: _____ Phone: _____

Installer Name: _____ Type of Installation: _____

1. Factory Fire-Test: (copy from boiler label)

	High	Low
Inlet Gas	_____ "w.c.	_____ "w.c.
Oxygen (O2)	_____ %	_____ %
Carbon Dioxide (CO2)	_____ %	_____ %
Carbon Monoxide (CO)	_____ ppm	_____ ppm
Stack Temperature	_____ ° F	_____ ° F
Main Flame Signal	_____ uA	_____ uA
Inlet AirTemperature	_____ ° F	_____ ° F

*Nox is not a P-K required reading.

2. Sealed Combustion: YES or NO

2a. Combustion Air Temperature: _____ ° F

2b. Approximate Elevation: _____ Ft.

3. Water Inlet Temperature: _____ ° F

4. Water Outlet Temperature: _____ ° F

5. Water Flow: _____ gpm

5a. Glycol ? YES or NO

6. Operating Temperature Setpoint: _____ ° F
(from internal OR external control)

7. Gas Valve a. Low Fire Setting (N) _____

b. High Fire Setting (V) _____

8. Approximate Stack Lengths:

_____ Ft. Horizontal

_____ Ft. Vertical

_____ Flue Pipe Diameter

Start-Up Field Test: DATE: _____

	High	Low
Inlet Gas	_____ "w.c.	_____ "w.c.
Oxygen (O2)	_____ %	_____ %
Carbon Dioxide (CO2)	_____ %	_____ %
Carbon Monoxide (CO)	_____ ppm	_____ ppm
Stack Temperature (net)	_____ ° F	_____ ° F
Main Flame Signal	_____ uA	_____ uA
Inlet Air Temperature	_____ ° F	_____ ° F

9. Stack Pressure (measured where stack exits boiler):

_____ "w.c. (High)

_____ "w.c. (Low)

10. Electrical Supply Power: L1 to L2 _____ Volts

L1 to N _____ Volts

Less than 1 volt between neutral and ground: YES or NO

11. Total Cycles: _____

12. Total Hours: _____

13. Any Faults? Describe with _____

code, time and description: _____

Lockup/Static Gas pressure _____

Gas pressure drop @ ignition Example: 10" Static - drops to 8" @ Ignition

14. Condensate drain from boiler connected to stack drain with Stainless Steel or High-Temp (500°F) Silicon piping or tubing, and then trapped: YES or NO

Performed by: _____

Additional Comments: _____

Please return a copy to HIP-K, ATTN: Boiler Tech Support Department
Harsco Industrial, Patterson-Kelley • 155 Burson Street • East Stroudsburg, PA 18301
P) 570-476-7261 F) 570-476-7247 www.harscopk.com

Appendix 1: Maintenance Log

Date	Hi Fire / Low Fire	O_2	CO	CO_2	Stack Temp	pH	Action	By

Appendix 2: Boiler Altitude Derate Schedule

For installations over 2000 ft. elevations, a derate schedule is applied. The boiler input rating must be reduced by 4% per 1000 ft. which is illustrated in the graph below.

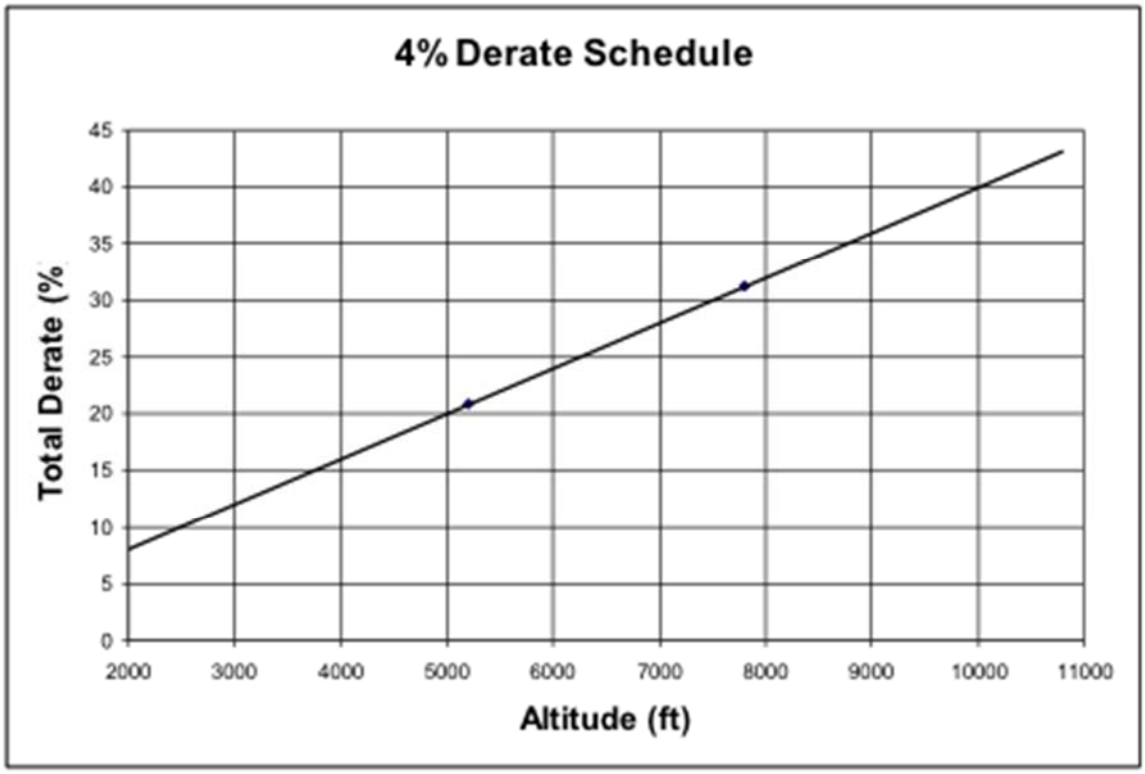

Derate procedure is as follows:

With the boiler at high fire, adjust the gas valves (as described in *Section 3.10.4*) to get 5% O2 in the flue gas. If this cannot be achieved, perform the following steps:

- If the O2% is too high, then the inlet gas pressure should be adjusted to the minimum pressure allowed, typically 5” wc The gas valve should be adjusted to obtain approximately 5% O2. If the O2% is still too high, the fan speed may be lowered. This procedure should only be performed by factory trained personnel.
- If the O2% is too low, then the gas valve settings should be reduced. This procedure is also described in Bulletin 06-08.

Appendix 3: Water Quality Standards for Hydronic Boilers in Multi-Metal Systems

HARSCO Industrial, Patterson-Kelley boilers are designed to be incorporated into any multi-metal hydronic heating system. All multi-metal hydronic systems require that attention be paid to water treatment. The chemical additives for any multi-metal system must be specifically formulated for use with all the various metals used in that system.

Any closed, hydronic heating systems should include a meter, to monitor water addition to the recirculating loop, and a filter, pursuant to ASHRAE Standard 189.1 and the AWT Handbook. Water added to a closed hydronic system should not exceed more than 10% of the system volume per year and meter readings should be recorded, at least monthly, to ensure system losses are minimized and corrective actions shall be taken when needed.

Treatment programs for multi-metal systems should meet or exceed the following generally accepted best practices water quality guidelines:

1. Proper cleaning and surface preparation must be completed prior to system start-up.
2. pH must be maintained in a range that is appropriate for the metals contained in the system (see chart below).
3. Total Alkalinity between 100-500 ppm as $CaCO_3$.
4. Filtration as per industry best practices.
5. Total suspended solids below 10 ppm.
6. Corrosion inhibiting compounds to protect metals at or below:
   a. Aluminum <0.25 MPY
   b. Copper <0.1 MPY, soluble copper <0.25 ppm
   c. Steel <3.0 MPY According to ASTM D 2688
7. Addition of strong acids is not recommended.
8. Maintain Chlorides < 125 mg/l.

Prior to initiating any treatment program, a water sample of the proposed fill water should be sampled for analysis. Once filled and bled of air, a pH neutral, industrial cleaner for use in multi-metal systems should be used to clean the entire hydronic system. Samples of the system water with cleaner should be taken and analyzed to ensure proper cleaner strength. Once cleaned, the system should be flushed with fresh (fill) water until the system water is within 100 micro Siemens in conductivity of the fresh water. When flushing is complete, a treatment program that is designed for use in that multi-metal system, after consideration of the metals it contains, must be used. Treatment programs should also comply with the standard water quality guidelines listed above.

Multi-Metal Systems with Aluminum	Multi-Metal Systems with Stainless Steel	Multi-Metal Systems with Copper
Proper surface cleaning required	Proper surface cleaning required	Proper surface cleaning required.
pH maintained between 6.0-8.5*	pH maintained between 6.6-8.5*¤	pH range may vary *`**
Total Alkalinity 100-500 ppm as $CaCO_3$	Total Alkalinity 100-500 ppm as $CaCO_3$	Total Alkalinity 100-500 ppm as $CaCO_3$
Best Practices Filtration	Best Practices Filtration	Best Practices Filtration
Suspended solids below 10 ppm	Suspended solids below 10 ppm	Suspended solids below 10 ppm
Corrosion rates below: 0.1 MPY copper 3.0 MPY steel 0.25 MPY aluminum	Corrosion rates below: 0.1 MPY copper 3.0 MPY steel 0.1 MPY sst ^	Corrosion rates below: 0.1 MPY copper 3.0 MPY steel Max. MPY other metals
Addition of strong acid not recommended	Addition of strong acids not recommended	Addition of strong acids not recommended
When freeze protection is required, automotive grade glycols are not recommended and decomposition products should be monitored and maintained below concentrations that present corrosive conditions. For existing boiler water systems, additional requirements and operational conditions may be required to mitigate pre-existing conditions.		
* Other system components may have more restrictive ranges.		
¤ Per Industry SST Heat Exchanger Manufacturers		
** Copper has a broad range of acceptable pH and the other metallic components may require a tighter range		
^ Per ASHRAE/AIA Presentation # 6017 2012 Winter Conference		

© 2013 Harsco Corporation. All Rights Reserved.

Rev. 10/15/2013