BULLETIN 400

PK® COMPACT SERIES 400®

WATER HEATERS*

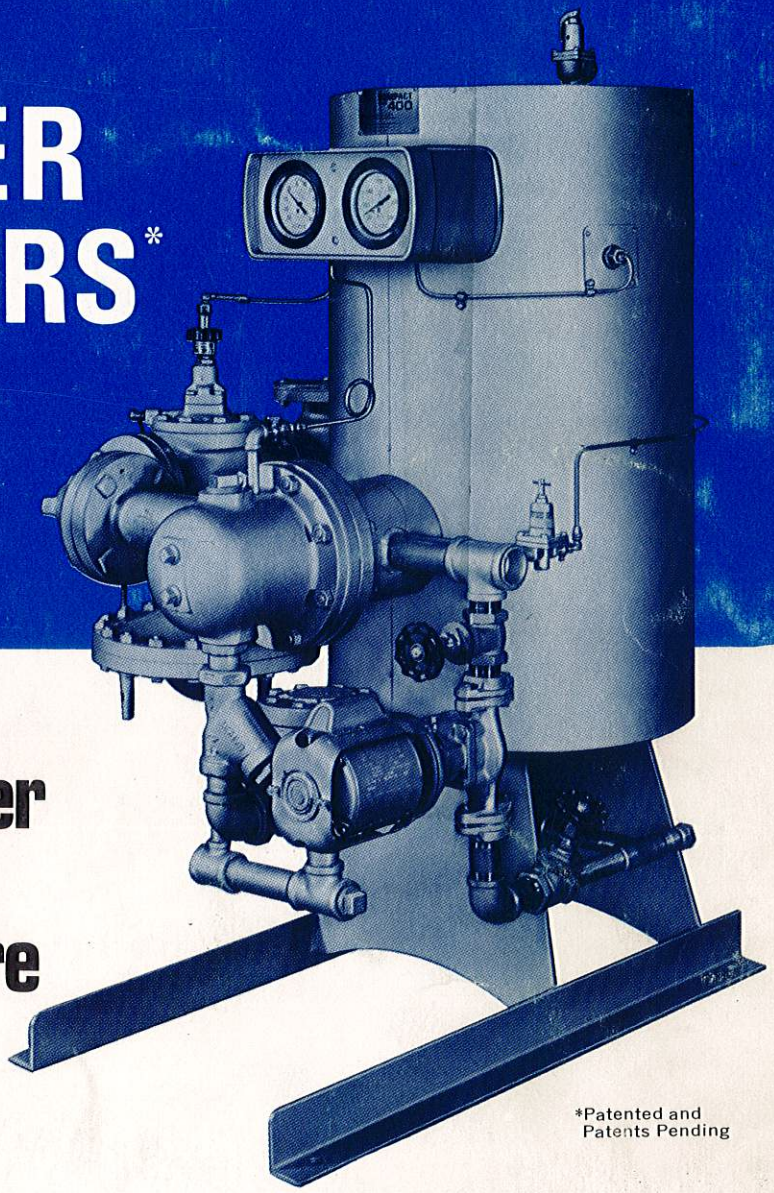

- steam
- boiler water
- high temperature water

*Patented and Patents Pending

THE PATTERSON-KELLEY CO., INC.

WATER HEATER DIVISION / EAST STROUDSBURG, PENNSYLVANIA 18301

COPYRIGHT 1971—THE PATTERSON-KELLEY CO., INC./EAST STROUDSBURG, PA.

CONTENTS

2 . . . . . P-K Guarantee

3 . . . . . Compact 400 Features

4-5 . . . . . Operation

6-9 . . . . . Capacity Tables—Steam to Water

10 . . . . . Booster Heater Capacity Tables—Steam to Water

11 . . . . . Dimensional Data—Steam to Water

12-23 . . . . . Capacity Tables—Boiler Water to Water

24-27 . . . . . Capacity Tables—High Temperature Water to Water

28 . . . . . Booster Heater Capacity Tables—Boiler Water to Water—High Temperature Water to Water

29 . . . . . Dimensional Data—Boiler Water to Water—High Temperature Water to Water

30 . . . . . Boiler Water and High Temperature Water Piping Arrangements

31 . . . . . Guide Specification—Steam to Water

32 . . . . . Guide Specification—Boiler Water to Water

33 . . . . . Guide Specification—High Temperature Water to Water

PATTERSON-KELLEY GUARANTEE

We guarantee all materials and workmanship used in the construction of Patterson-Kelley Compact Series 400 Water Heaters to be first class in every respect. If any part proves defective within one year from date of start-up, a new part will be supplied without charge, f.o.b. East Stroudsburg, Pennsylvania. We also guarantee each P-K Compact 400 to heat water at its rated capacity.

ASME CONSTRUCTION

P-K Compact Series 400 Water Heaters are fabricated in accordance with the ASME Code and have an insurance company certificate of inspection and test.

FEATURES OF THE P-K COMPACT SERIES 400® WATER HEATERS

I. UNIT RESPONSIBILITY is inherent in P-K packaged water heaters because of their high-quality design and construction. Quality manufacturing for more than 90 years insures guaranteed future service.

II. A SPACE AND TIME SAVER, the Compact 400 economizes on usable space and fits quickly into position with only five connections to be made.

III. CONSTANT INDUCED FLOW OF WATER over the heating surface reduces tube wall temperature, minimizes scale formation and fouling, and maintains high heat-transfer efficiency.

IV. OPTIMUM WATER VELOCITIES AND PRESSURE DROP are part of the basic design.

V. ANTICIPATOR* CONTROL SYSTEM meters steam demand to exact proportions of hot water requirements and regulates hot water outlet temperatures to very close tolerances.

VI. THE P-K COMPACT 400 performs equally well with any heating medium—steam, low or medium temperature boiler water, high-temperature water or heat transfer fluid.

VII. UNIT CANNOT CAUSE RUST IN WATER because all materials in contact with domestic water are copper or copper silicon.

VIII. TUBE BUNDLE IS REMOVED EASILY for inspection and service.

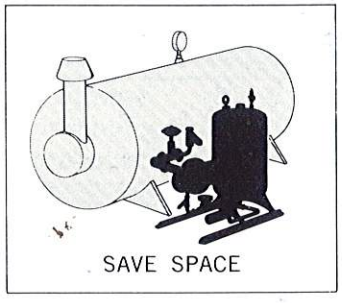

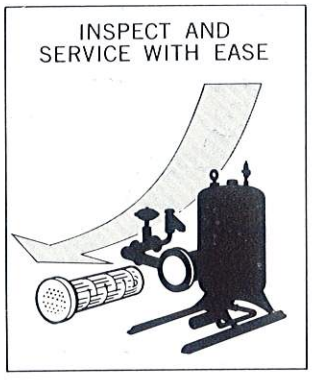

*Reg. Trademark of The Patterson-Kelley Co., Inc.

THE P-K COMPACT SERIES 400® WATER HEATER

Schematic shows general arrangement of P-K Compact Series 400 Water Heater. Steam passes through tubes of the heat exchanger bundle. Water, directed over the tubes by segmental baffles inside a cylindrical wrapper, is heated by the time it enters the storage section. Minimum storage volume above the wrapped tube bundle is provided to give controls a sufficient time interval for close temperature control.

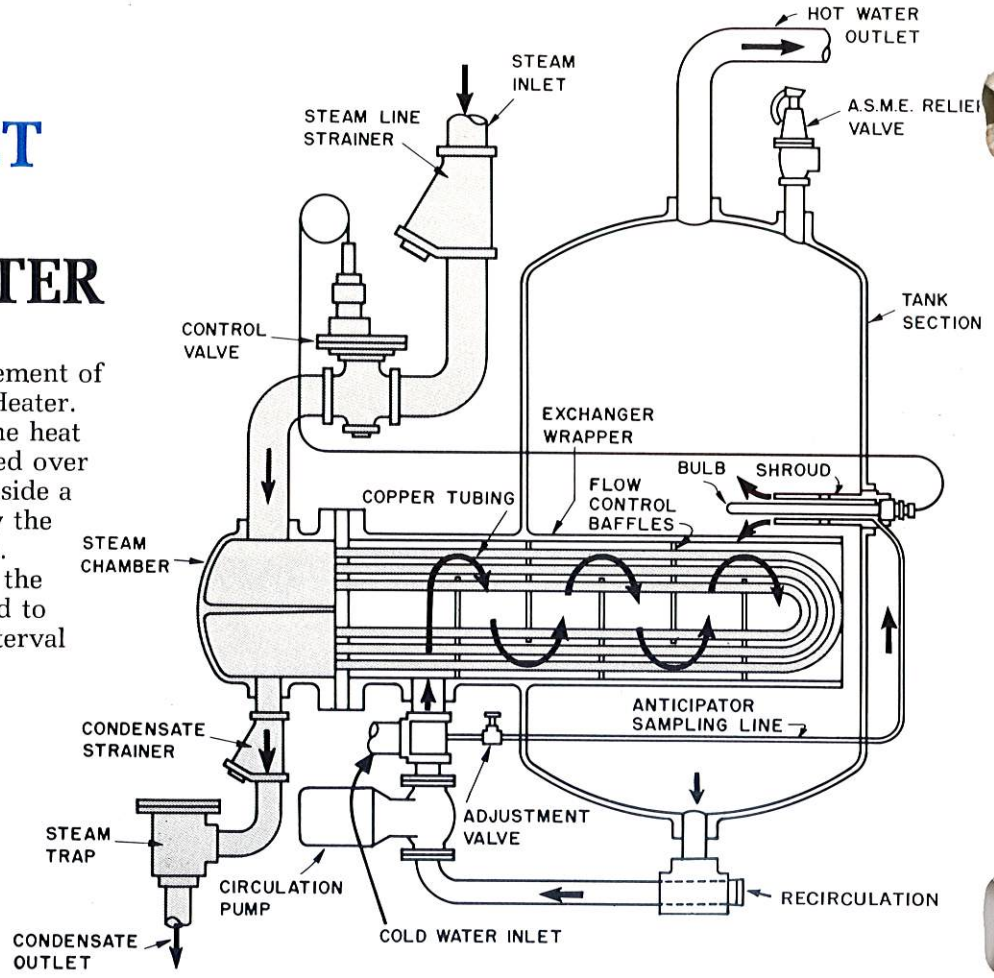

P-K ANTICIPATOR®

Shrouded temperature-sensing bulb anticipates a need for heat before any temperature change can occur at the hot water outlet. Chilled by a sampling flow that is proportional to demand, it sends an immediate control signal to the steam regulator valve calling for more heat. When demand ceases, the bulb shifts back to monitoring water temperature in the tank.

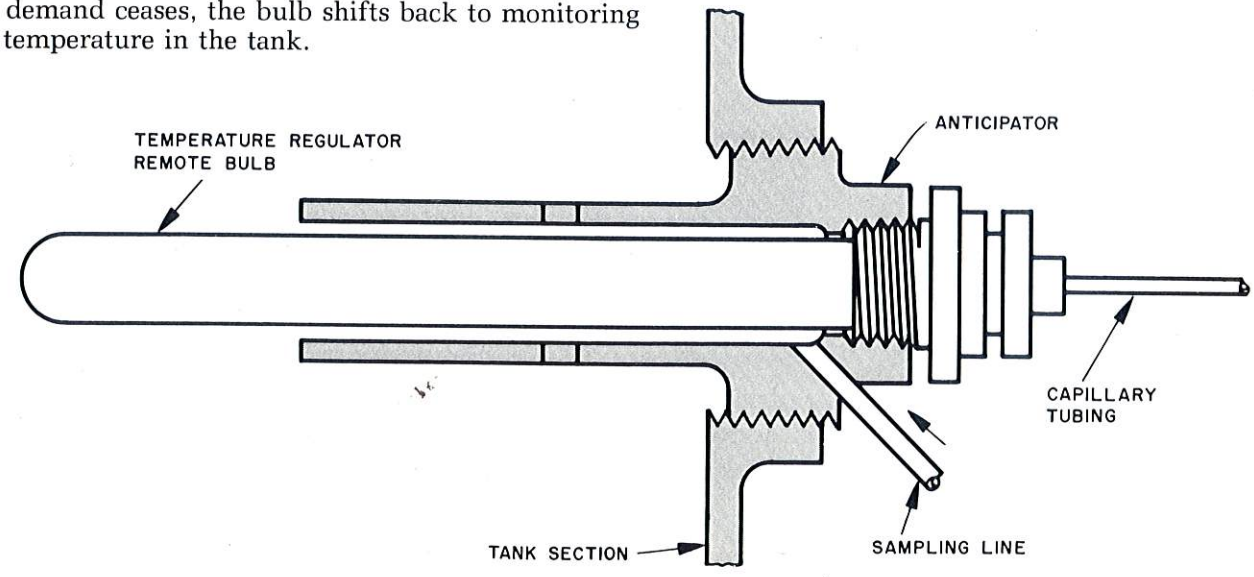

P-K COMPACT SERIES 400® WATER HEATER OPERATION

The P-K Compact Series 400 Water Heater is a high-capacity, semi-instantaneous unit that does the work of a conventional unit up to four times its size. It incorporates a unique ANTICIPATOR control system that maintains the hot water outlet temperature within very close tolerances, thus eliminating temperature fluctuations at the outlet—even with wide, sudden changes in hot water demand.

The ANTICIPATOR control system responds to the temperature and flow rate of incoming water, as well as temperature of stored water. When hot water is drawn from the heater, the ANTICIPATOR senses the change in flow and temperature, signals the temperature control valve to open and provides more heat before the temperature changes at the hot water outlet.

The thermal bulb of the temperature control valve is located in the storage section above the tube bundle and responds to two environments. First, it controls the temperature of the stored hot water. Secondly, it responds, through the ANTICIPATOR, to the incoming water temperature and water flow rates, since incoming flow and hot water delivery are equal. The combination of incoming temperature and flow rate is an accurate, instantaneous measure of heat demand.

The flow through the ANTICIPATOR is caused by a difference in pressure between incoming water and the water in storage. When no water is drawn, this pressure is balanced; hence no flow. Since the pressure difference is proportional to the rate of flow, the ANTICIPATOR can cause the bulb to sense varying flow rates by allowing a sample of incoming cold water to enter a shroud that surrounds the temperature-sensing bulb.

Incoming cold water, except for the small flow diverted for sampling, enters the heater through the heat exchanger. The water flows over the tubes by controlled velocity following a course, formed by the baffles that support the U-Tubes in the wrapped section. The water has been heated by the time it reaches the storage section, entering at relatively low velocity to blend with the heated water in the storage section.

The Compact 400 is completely assembled and tested at our plant, and is shipped, ready to connect to services. Construction is of the highest quality for long service, with all materials in contact with domestic water being either copper or copper silicon.

The Compact 400 operates on steam, low- or medium-temperature boiler water, or high-temperature water or heat transfer fluid.

STEAM TO WATER SECTION

COMPACT 400 CAPACITIES IN G.P.M. — PRESSURE DROP IN P.S.I.

40° F INLET WATER

TEMP. RANGE	SIZE HEATER	STEAM LINE PRESSURE P.S.I.G.																	
		2		5		10		15		25		40		50		75		100	
		STEAM PRESSURE IN HEATING SECTION P.S.I.G.																	
		0		2		5		10		15		25		30		50		65	
		GPM	PD	GPM	PD	GPM	PD	GPM	PD	GPM	PD	GPM	PD	GPM	PD	GPM	PD	GPM	PD
40° TO 120°	401-16	14	.21	16	.25	18	.31	21	.43	24	.53	28	.73	30	.82	36	1.16	40	1.41
	402-16	28	.49	30	.57	34	.70	39	.90	43	1.09	50	1.45	54	1.62	55	1.72	61	1.17
	403-18	53	.90	60	1.10	69	1.45	81	1.94	86	2.18	86	2.18	91	1.27	109	1.79	121	2.15
	404-20	54	.58	60	.72	70	.95	85	1.39	100	1.89	127	2.98	127	3.00	127	3.00	127	3.00
	405-20	90	.72	101	.89	117	1.17	133	1.49	147	1.79	156	2.00	156	2.00	156	2.00	156	2.00
	406-24	91	.68	101	.90	117	1.18	143	1.72	168	2.33	179	2.61	179	2.61	179	2.61	179	2.61
	407-24	135	.68	152	.84	176	1.11	204	1.47	225	1.77	245	2.07	245	2.07	245	2.07	245	2.07
	408-24	135	.76	152	.94	176	1.24	214	1.81	252	2.45	264	2.68	264	2.68	264	2.68	264	2.68
	409-30	163	.44	183	.55	212	.72	259	1.03	304	1.39	320	1.53	320	1.53	320	1.53	320	1.53
	410-30	163	.30	183	.37	212	.49	259	.70	304	.95	394	1.54	427	1.79	427	1.79	427	1.79
	411-36	222	.32	248	.40	287	.52	335	.69	374	.85	440	1.14	467	1.27	496	1.42	496	1.42
	412-36	222	.22	248	.27	287	.35	351	.51	412	.69	518	1.05	553	1.18	661	1.65	661	1.65
40° TO 140°	401-16	8	.07	9	.09	10	.12	12	.16	14	.21	18	.32	19	.36	24	.54	27	.66
	402-16	16	.18	18	.22	21	.29	25	.38	28	.48	33	.66	35	.75	43	1.08	48	1.32
	403-18	36	.43	40	.52	45	.65	52	.85	59	1.05	69	1.43	74	1.61	86	2.15	86	2.15
	404-20	43	.38	48	.77	56	1.01	68	1.47	80	2.00	95	2.75	98	2.90	108	2.17	120	2.66
	405-20	69	.70	76	.83	85	1.03	98	1.33	109	1.63	122	2.01	122	2.01	147	1.77	156	1.97
	406-24	72	.47	81	.58	94	.77	114	1.12	135	1.51	158	2.05	171	2.38	179	2.58	179	2.58
	407-24	108	.77	121	.95	133	1.13	153	1.47	171	1.79	185	2.07	186	1.22	225	1.75	245	2.04
	408-24	108	.49	121	.61	140	.81	171	1.17	202	1.59	251	2.41	262	2.61	264	2.65	264	2.65
	409-30	131	.71	146	.87	169	1.14	207	1.65	240	2.17	242	.90	259	1.01	320	1.50	320	1.50
	410-30	131	.19	146	.24	169	.32	207	.46	243	.62	315	2.52	320	2.59	373	1.37	414	1.66
	411-36	177	.69	198	.85	230	1.12	280	1.61	330	2.18	330	2.18	330	2.18	377	.84	421	1.03
	412-36	177	.46	198	.57	230	.75	280	1.09	330	1.47	427	2.39	428	2.40	446	.78	498	.96
40° TO 160°	401-16	4	.02	5	.03	6	.04	7	.06	9	.09	11	.14	12	.16	16	.27	19	.34
	402-16	9	.06	11	.08	12	.11	15	.15	18	.22	23	.32	24	.37	31	.56	34	.70
	403-18	21	.16	25	.21	29	.28	35	.39	40	.50	48	.72	52	.82	64	1.22	72	1.50
	404-20	32	.35	36	.44	42	.58	50	.80	56	1.02	68	1.45	73	1.66	88	2.36	95	2.70
	405-20	43	.29	48	.36	55	.46	66	.63	75	.80	90	1.12	97	1.28	122	1.98	122	1.98
	406-24	60	.65	67	.80	78	1.05	95	1.52	112	2.05	127	2.58	128	2.64	146	1.74	164	2.16
	407-24	68	.32	76	.40	87	.51	103	.69	117	.88	141	1.24	151	1.41	185	2.04	185	2.04
	408-24	90	.53	101	.66	117	.86	143	1.25	162	1.58	194	2.22	203	2.41	233	2.06	251	2.37
	409-30	109	.50	122	.61	141	.80	164	1.05	185	1.32	222	1.85	240	2.14	240	2.14	251	.94
	410-30	109	.34	122	.42	141	.55	172	.80	203	1.09	263	1.76	291	2.14	320	2.56	320	2.56
	411-36	143	.46	160	.57	184	.73	218	1.00	247	1.25	295	1.74	317	1.99	330	2.15	330	2.15
	412-36	148	.32	165	.40	191	.53	234	.76	275	1.30	356	1.68	374	1.84	428	2.37	428	2.37
40° TO 180°	401-16	2	.01	2	.01	3	.01	4	.03	5	.04	7	.06	8	.07	11	.13	13	.17
	402-16	5	.02	6	.03	7	.04	10	.07	11	.09	15	.15	17	.19	22	.30	25	.39
	403-18	12	.05	14	.07	17	.11	23	.18	27	.24	34	.37	37	.43	47	.67	52	.85
	404-20	18	.12	21	.16	27	.09	33	.37	39	.50	48	.75	52	.88	66	1.36	76	1.78
	405-20	24	.10	28	.13	35	.20	44	.29	51	.39	64	.59	69	.68	88	1.05	99	1.31
	406-24	38	.28	44	.37	53	.51	65	.75	76	.98	94	1.46	101	1.68	122	2.36	128	2.60
	407-24	38	.11	46	.16	56	.22	69	.33	81	.43	100	.65	109	.75	137	1.16	155	1.44
	408-24	54	.21	65	.29	78	.40	96	.59	112	.79	139	1.17	150	1.35	186	2.03	202	2.35
	409-30	62	.17	75	.25	89	.34	110	.50	128	.66	159	.98	172	1.14	216	1.73	240	2.11
	410-30	71	.15	87	.22	104	.31	129	.46	151	.62	188	.93	204	1.08	257	1.67	290	2.10
	411-36	82	.16	99	.23	119	.32	146	.47	170	.62	211	.93	228	1.07	287	1.63	330	2.12
	412-36	94	.14	114	.20	137	.28	171	.42	199	.56	248	.84	269	.98	339	1.51	382	1.89

NOTE: The G.P.M. rating of all tables is based on the indicated steam pressure in the heating section. The temperature control valves have been sized on the basis of supplying the required steam pressure using the indicated saturated steam pressure in the steam line before the control valve. All ratings are based on the use of high-quality, saturated steam.

50° F INLET WATER

TEMP. RANGE	SIZE HEATER	STEAM LINE PRESSURE P.S.I.G.																	
		2		5		10		15		25		40		50		75		100	
		STEAM PRESSURE IN HEATING SECTION P.S.I.G.																	
		0		2		5		10		15		25		30		50		65	
		GPM	PD	GPM	PD	GPM	PD	GPM	PD	GPM	PD	GPM	PD	GPM	PD	GPM	PD	GPM	PD
50 TO 120°	401-16	18	.33	20	.39	22	.48	26	.63	29	.77	34	1.04	36	1.18	44	1.67	48	1.95
	402-16	34	.70	37	.81	41	.98	47	1.26	52	1.53	55	1.71	55	.98	67	1.39	74	1.67
	403-18	61	1.14	68	1.41	79	1.85	86	2.17	89	1.19	104	1.61	110	1.81	124	2.27	124	2.27
	404-20	61	.75	69	.92	79	1.22	97	1.78	114	2.43	128	3.00	128	3.00	128	3.00	128	3.00
	405-20	103	.92	115	1.13	134	1.49	156	1.99	156	1.99	156	1.99	156	1.99	156	1.99	156	1.99
	406-24	103	.93	115	1.15	134	1.51	164	2.20	179	2.59	179	2.59	179	2.59	179	2.59	179	2.59
	407-24	155	.87	173	1.08	201	1.42	245	2.05	245	2.05	245	2.05	245	2.05	245	2.05	245	2.05
	408-24	155	.97	173	1.20	201	1.59	245	2.31	264	2.66	264	2.66	264	2.66	264	2.66	264	2.66
	409-30	187	.56	209	.69	242	.91	296	1.31	320	1.51	320	1.51	320	1.51	320	1.51	320	1.51
	410-30	187	.38	209	.47	242	.62	296	.89	348	1.21	427	1.77	427	1.77	427	1.77	427	1.77
	411-36	253	.41	283	.50	328	.66	401	.95	453	1.19	496	1.41	496	1.41	496	1.41	496	1.41
	412-36	253	.28	283	.34	328	.45	401	.65	471	.87	611	1.41	661	1.64	661	1.64	661	1.64
50 TO 140°	401-16	9	.10	11	.12	12	.16	15	.22	17	.30	21	.42	23	.48	28	.72	31	.88
	402-16	19	.25	22	.30	24	.37	29	.50	32	.62	39	.86	41	.98	50	1.41	55	1.68
	403-18	42	.56	46	.67	52	.83	60	1.09	67	1.35	80	1.85	86	2.14	86	2.14	96	1.36
	404-20	48	.46	54	.57	62	.75	75	1.79	89	2.42	98	2.88	103	1.97	122	2.73	128	3.00
	405-20	80	.91	87	1.05	97	1.30	112	1.69	122	1.99	131	1.42	140	1.60	156	1.96	156	1.96
	406-24	80	.57	90	.71	104	.93	127	1.35	149	1.83	179	2.55	179	2.56	179	2.56	179	2.56
	407-24	120	.93	135	1.14	156	1.50	175	1.86	185	2.05	201	1.40	215	1.58	245	2.02	245	2.02
	408-24	120	.60	135	.74	156	.98	190	1.42	224	1.92	264	2.63	264	2.63	264	2.63	264	2.63
	409-30	145	.35	163	1.05	188	1.38	230	1.99	240	2.15	281	1.17	300	1.32	320	1.49	320	1.49
	410-30	145	.23	163	.29	188	.38	230	.55	270	.75	331	1.09	355	1.24	427	1.75	427	1.75
	411-36	195	.83	220	1.03	255	1.35	312	1.95	330	2.17	334	.67	358	.76	440	1.11	496	1.38
	412-36	197	.56	220	.69	255	.91	312	1.32	366	1.78	428	2.38	428	2.38	521	1.04	581	1.27
50 TO 160°	401-16	5	.03	6	.04	7	.06	9	.08	10	.11	13	.18	14	.21	19	.34	21	.43
	402-16	10	.08	12	.10	14	.14	18	.21	21	.28	26	.40	28	.46	35	.70	39	.87
	403-18	25	.21	28	.26	33	.35	39	.48	45	.62	54	.88	59	1.01	72	1.50	82	1.90
	404-20	38	.43	40	.54	46	.71	55	.98	63	1.25	78	1.86	82	2.04	94	2.65	98	1.75
	405-20	48	.35	54	.43	62	.56	73	.76	83	.97	101	1.37	108	1.56	122	1.96	132	1.42
	406-24	66	.76	74	.93	85	1.23	104	1.78	119	2.29	128	2.62	133	1.45	163	2.12	175	2.44
	407-24	75	.39	84	.48	97	.61	115	.84	131	1.07	158	1.50	169	1.71	185	2.02	203	1.41
	408-24	98	.62	110	.77	128	1.01	156	1.46	182	1.96	206	2.47	211	2.58	249	2.32	264	2.60
	409-30	119	.58	133	.71	154	.94	182	1.27	206	1.60	240	2.12	240	2.12	252	.94	283	1.17
	410-30	119	.40	133	.49	154	.65	188	.94	221	1.27	286	2.06	311	2.41	320	2.54	335	1.10
	411-36	161	.57	180	.70	209	.92	242	1.20	274	1.51	330	2.13	330	2.13	330	2.13	338	.67
	412-36	161	.38	180	.47	209	.62	255	.89	300	1.21	388	1.96	428	2.35	428	2.35	428	2.35
50 TO 180°	401-16	2	.01	3	.01	4	.02	5	.03	6	.05	8	.08	9	.09	13	.16	15	.22
	402-16	5	.02	6	.03	8	.05	11	.08	13	.12	17	.19	19	.23	24	.37	28	.47
	403-18	13	.06	16	.09	19	.13	25	.21	30	.29	37	.44	41	.51	52	.80	59	1.01
	404-20	20	.14	23	.19	29	.29	36	.44	42	.59	53	.89	57	1.04	74	1.68	80	1.95
	405-20	26	.11	32	.16	39	.23	48	.35	56	.46	70	.69	76	.81	96	1.24	109	1.55
	406-24	42	.32	48	.43	58	.59	71	.87	83	1.15	104	1.76	110	1.94	128	2.58	128	2.59
	407-24	43	.14	50	.18	61	.26	76	.38	88	.51	110	.77	119	.89	151	1.37	174	1.79
	408-24	61	.25	71	.34	85	.47	105	.69	122	.92	152	1.37	168	1.67	196	2.22	213	1.71
	409-30	69	.21	81	.28	97	.40	120	.58	140	.77	174	1.15	188	1.33	239	2.08	240	2.09
	410-30	81	.19	95	.26	114	.36	142	.55	166	.73	206	1.10	223	1.28	282	1.98	306	2.31
	411-36	92	.20	108	.27	129	.37	160	.55	186	.73	231	1.08	250	1.26	314	1.92	330	2.10
	412-36	103	.16	125	.23	150	.33	187	.49	218	.66	272	.99	295	1.16	372	1.79	422	2.26

COMPACT 400 CAPACITIES IN G.P.M. — PRESSURE DROP IN P.S.I.

60° F INLET WATER

TEMP. RANGE	SIZE HEATER	STEAM LINE PRESSURE P.S.I.G.																	
		2		5		10		15		25		40		50		75		100	
		STEAM PRESSURE IN HEATING SECTION P.S.I.G.																	
		0		2		5		10		15		25		30		50		65	
		GPM	PD	GPM	PD	GPM	PD	GPM	PD	GPM	PD	GPM	PD	GPM	PD	GPM	PD	GPM	PD
60° TO 120°	401-16	23	.50	25	.59	28	.73	32	.95	36	1.16	43	1.57	45	1.77	48	1.93	48	1.93
	402-16	40	.92	45	1.14	52	1.50	55	1.69	55	1.69	65	1.31	69	1.47	74	1.66	74	1.66
	403-18	71	.79	80	1.86	86	1.13	99	1.46	110	1.78	124	2.26	124	2.26	124	2.26	124	2.26
	404-20	72	.99	80	1.23	93	1.63	114	2.38	128	3.00	128	3.00	128	3.00	128	3.00	128	3.00
	405-20	120	1.21	135	1.50	156	1.97	156	1.97	156	1.97	156	1.97	156	1.97	156	1.97	156	1.97
	406-24	121	1.23	135	1.52	156	2.01	179	2.58	179	2.58	179	2.58	179	2.58	179	2.58	179	2.58
	407-24	181	1.16	202	1.43	234	1.88	245	2.04	245	2.04	245	2.04	245	2.04	245	2.04	245	2.04
	408-24	181	1.29	202	1.60	234	2.11	264	2.65	264	2.65	264	2.65	264	2.65	264	2.65	264	2.65
	409-30	218	.74	244	.91	283	1.19	320	1.50	320	1.50	320	1.50	320	1.50	320	1.50	320	1.50
	410-30	218	.50	244	.62	283	.82	345	1.18	406	1.60	427	1.76	427	1.76	427	1.76	427	1.76
	411-36	295	.54	331	.66	383	.87	468	1.25	496	1.39	496	1.39	496	1.39	496	1.39	496	1.39
	412-36	295	.36	331	.45	383	.59	468	.85	550	1.16	661	1.63	661	1.63	661	1.63	661	1.63
60° TO 140°	401-16	11	.14	13	.17	15	.22	18	.32	21	.41	25	.58	27	.67	33	.98	37	1.21
	402-16	23	.33	25	.40	29	.50	34	.67	38	.84	45	1.16	48	1.31	55	1.67	57	1.00
	403-18	49	.73	54	.88	60	1.09	70	1.44	79	1.78	86	2.12	86	2.12	101	1.51	113	1.85
	404-20	54	.57	60	.71	70	.93	85	1.36	98	2.87	113	2.33	118	2.53	128	3.00	128	3.00
	405-20	90	1.12	101	1.38	112	1.69	122	1.98	129	1.37	156	1.95	156	1.95	156	1.95	156	1.95
	406-24	90	.71	101	.87	117	1.15	128	2.64	168	2.27	179	2.55	179	2.55	179	2.55	179	2.55
	407-24	135	1.14	152	1.41	176	1.85	185	2.04	198	1.35	235	1.86	245	2.01	245	2.01	245	2.01
	408-24	135	.74	152	.92	176	1.21	214	1.76	252	2.39	264	2.61	264	2.61	264	2.61	264	2.61
	409-30	163	.43	183	.53	212	.69	246	.91	276	1.13	320	1.48	320	1.48	320	1.48	320	1.48
	410-30	163	.29	183	.36	212	.47	259	.68	304	.92	394	1.49	427	1.74	427	1.74	427	1.74
	411-36	222	1.03	248	1.27	287	1.66	330	2.15	331	.65	395	.90	424	1.03	496	1.37	496	1.37
	412-36	222	.21	248	.26	287	.34	351	.49	412	2.21	469	.85	503	.96	617	1.41	661	1.61
60° TO 160°	401-16	6	.04	7	.05	8	.07	10	.11	12	.15	16	.24	17	.28	22	.44	25	.56
	402-16	12	.10	14	.13	17	.19	21	.27	24	.35	29	.51	32	.59	40	.89	44	1.10
	403-18	28	.26	32	.33	37	.43	44	.60	50	.77	61	1.10	66	1.27	82	1.88	86	2.10
	404-20	40	.53	45	.67	52	.87	62	1.22	71	1.55	84	2.11	88	2.31	101	1.87	109	2.16
	405-20	53	.42	60	.53	69	.68	83	.94	94	1.19	113	1.69	122	1.95	134	1.45	154	1.86
	406-24	72	.90	81	1.11	94	1.45	114	2.10	127	2.57	140	1.58	152	1.85	175	2.42	179	2.52
	407-24	84	.47	95	.58	109	.75	129	1.04	147	1.31	181	1.93	185	2.01	206	1.43	237	1.87
	408-24	108	.74	121	.91	140	1.20	171	1.73	195	2.21	221	1.85	232	2.02	264	2.58	264	2.58
	409-30	131	.69	146	.84	169	1.11	207	1.60	238	2.07	240	2.11	240	2.11	287	1.19	320	1.45
	410-30	131	.47	146	.58	169	.77	207	1.12	243	1.51	315	2.45	320	2.53	340	1.12	382	1.40
	411-36	177	.67	198	.83	230	1.08	271	1.47	307	1.85	330	2.12	330	2.12	344	.69	388	.86
	412-36	177	.45	198	.55	230	.73	280	1.06	330	1.43	427	2.33	428	2.34	428	2.34	461	.81
60° TO 180°	401-16	2	.01	3	.02	4	.02	6	.04	7	.06	10	.10	11	.12	15	.21	17	.28
	402-16	6	.03	7	.04	9	.06	12	.10	15	.15	19	.24	21	.28	27	.45	31	.57
	403-18	14	.08	17	.11	22	.17	28	.25	33	.34	41	.53	45	.62	67	.97	65	1.22
	404-20	22	.17	27	.24	32	.35	40	.52	47	.70	59	1.07	64	1.25	78	1.86	85	2.17
	405-20	30	.14	35	.19	42	.27	53	.41	62	.55	78	.83	84	.96	107	1.48	120	1.85
	406-24	45	.37	53	.50	63	.69	78	1.02	91	1.35	110	1.93	116	2.13	128	2.57	128	2.57
	407-24	47	.16	55	.22	67	.30	83	.45	97	.60	121	.91	132	1.06	170	1.70	185	1.98
	408-24	66	.29	78	.39	93	.55	115	.82	134	1.09	168	1.66	178	1.83	208	1.62	226	1.90
	409-30	76	.25	89	.33	106	.46	132	.69	154	.91	191	1.36	207	1.58	204	2.08	240	2.08
	410-30	88	.23	104	.31	125	.43	156	.65	182	.87	227	1.31	246	1.53	299	2.19	320	2.50
	411-36	101	.23	118	.31	142	.44	175	.65	204	.86	254	1.28	275	1.49	330	2.09	330	2.09
	412-36	117	.20	137	.28	165	.39	206	.59	241	.79	300	1.19	325	1.38	412	2.15	428	2.31

NOTE: The G.P.M. rating of all tables is based on the indicated steam pressure in the heating section. The temperature control valves have been sized on the basis of supplying the required steam pressure using the indicated saturated steam pressure in the steam line before the control valve. All ratings are based on the use of high-quality, saturated steam.

70° F INLET WATER

TEMP. RANGE	SIZE HEATER	STEAM LINE PRESSURE P.S.I.G.																	
		2		5		10		15		25		40		50		75		100	
		STEAM PRESSURE IN HEATING SECTION P.S.I.G.																	
		0		2		5		10		15		25		30		50		65	
		GPM	PD	GPM	PD	GPM	PD	GPM	PD	GPM	PD	GPM	PD	GPM	PD	GPM	PD	GPM	PD
70° TO 120°	401-16	30	.81	33	.95	36	1.17	42	1.52	48	1.92	48	1.92	48	1.92	48	1.92	48	1.92
	402-16	48	1.29	54	1.59	56	.97	64	1.26	71	1.55	74	1.65	74	1.65	74	1.65	74	1.65
	403-18	86	1.11	96	1.37	112	1.82	124	2.24	124	2.24	124	2.24	124	2.24	124	2.24	124	2.24
	404-20	86	1.40	96	1.73	112	2.30	128	3.00	128	3.00	128	3.00	128	3.00	128	3.00	128	3.00
	405-20	144	1.70	156	1.96	156	1.96	156	1.96	156	1.96	156	1.96	156	1.96	156	1.96	156	1.96
	406-24	145	1.72	162	2.13	179	2.56	179	2.56	179	2.56	179	2.56	179	2.56	179	2.56	179	2.56
	407-24	217	1.61	243	2.00	245	2.02	245	2.02	245	2.02	245	2.02	245	2.02	245	2.02	245	2.02
	408-24	217	1.81	243	2.24	264	2.63	264	2.63	264	2.63	264	2.63	264	2.63	264	2.63	264	2.63
	409-30	262	1.03	293	1.26	320	1.49	320	1.49	320	1.49	320	1.49	230	1.49	230	1.49	320	1.49
	410-30	262	.70	293	.87	339	1.14	414	1.65	427	1.75	427	1.75	427	1.75	427	1.75	427	1.75
	411-36	355	.75	397	.92	460	1.20	496	1.38	496	1.38	496	1.38	496	1.38	496	1.38	496	1.38
	412-36	355	.51	397	.63	460	.82	561	1.19	660	1.61	661	1.62	661	1.62	661	1.62	661	1.62
70° TO 140°	401-16	14	.20	16	.26	19	.34	22	.46	25	.58	30	.83	33	.95	40	1.40	45	1.72
	402-16	27	.46	30	.55	34	.69	40	.93	45	1.16	55	1.66	55	1.66	61	1.16	69	1.42
	403-18	58	1.00	64	1.19	72	1.49	84	1.98	86	2.11	93	1.28	99	1.45	122	2.12	124	2.22
	404-20	62	.73	69	.90	80	1.20	97	1.75	112	2.28	126	2.85	129	3.00	129	3.00	129	3.00
	405-20	103	1.43	115	1.76	122	1.96	137	1.51	156	1.93	156	1.93	156	1.93	156	1.93	156	1.93
	406-24	103	.90	116	1.12	134	1.47	163	2.14	179	2.53	179	2.53	179	2.53	179	2.53	179	2.53
	407-24	155	1.45	173	1.79	185	2.02	210	1.50	235	1.86	245	2.00	245	2.00	245	2.00	245	2.00
	408-24	155	.95	173	1.17	201	1.55	245	2.25	264	2.60	264	2.60	264	2.60	264	2.60	264	2.60
	409-30	187	.54	209	.67	242	.88	296	1.26	320	1.46	320	1.46	320	1.46	320	1.46	320	1.46
	410-30	187	.37	209	.46	242	.60	296	.86	348	1.18	427	1.73	427	1.73	427	1.73	427	1.73
	411-36	253	1.31	283	1.61	328	2.11	352	.72	397	.90	476	1.26	496	1.36	496	1.36	496	1.36
	412-36	253	.27	283	.33	328	.43	401	.63	471	.85	565	1.19	605	1.35	661	1.60	661	1.60
70° TO 160°	401-16	7	.05	8	.07	10	.10	12	.15	15	.21	18	.32	20	.38	25	.59	29	.74
	402-16	14	.14	17	.18	20	.24	24	.35	27	.45	34	.66	36	.76	46	1.15	53	1.51
	403-18	32	.33	36	.41	42	.55	50	.76	58	.98	70	1.41	77	1.66	86	2.08	88	1.14
	404-20	46	.67	51	.84	60	1.10	73	1.62	79	1.91	90	2.43	95	2.67	110	2.18	118	2.52
	405-20	61	.53	68	.66	79	.86	94	1.18	107	1.50	122	1.93	124	1.24	154	1.87	156	1.91
	406-24	80	1.08	90	1.34	104	1.76	126	2.50	128	2.59	128	2.59	164	2.13	179	2.50	179	2.50
	407-24	95	.58	107	.73	123	.94	147	1.30	167	1.65	185	1.99	190	1.23	238	1.88	245	1.97
	408-24	120	.89	135	1.10	156	1.45	190	2.10	210	1.67	239	2.13	251	2.34	264	2.57	264	2.57
	409-30	145	.83	163	1.02	188	1.34	230	1.93	240	2.09	246	.89	265	1.02	320	1.44	320	1.44
	410-30	145	.57	163	.71	188	.93	230	1.35	270	1.83	320	2.51	320	2.51	392	1.45	427	1.70
	411-36	197	.81	220	1.00	255	1.31	312	1.89	330	2.10	330	2.10	330	2.10	398	.89	450	1.12
	412-36	197	.54	220	.67	255	.88	312	1.28	336	1.74	428	2.33	428	2.33	474	.84	534	1.06
70° TO 180°	401-16	3	.01	4	.02	5	.03	7	.05	8	.08	11	.13	12	.15	17	.27	19	.35
	402-16	7	.04	8	.05	11	.08	14	.13	17	.19	22	.29	24	.34	31	.55	35	.71
	403-18	16	.09	20	.14	25	.20	31	.31	37	.42	46	.64	50	.75	64	1.19	73	1.52
	404-20	25	.21	29	.29	35	.42	44	.63	52	.85	65	1.30	71	1.54	84	2.08	91	2.43
	405-20	33	.17	39	.23	47	.33	59	.49	69	.66	86	1.00	94	1.16	118	1.77	122	1.91
	406-24	50	.44	58	.59	70	.82	86	1.22	101	1.63	117	2.14	123	2.37	144	1.66	157	1.95
	407-24	52	.19	61	.26	74	.36	92	.54	108	.73	135	1.10	146	1.28	181	1.90	184	1.97
	408-24	73	.35	85	.47	103	.66	127	.98	148	1.30	179	1.84	189	2.03	221	1.82	245	2.13
	409-30	83	.29	98	.39	117	.55	146	.82	170	1.09	218	1.72	230	1.91	240	2.06	256	.94
	410-30	.97	.27	115	.37	139	.52	173	.78	202	1.05	257	1.64	271	1.82	318	2.46	320	2.48
	411-36	110	.28	113	.37	156	.52	194	.77	226	1.03	281	1.54	305	1.79	330	2.07	330	2.07
	412-36	129	.24	151	.33	183	.47	228	.71	266	.95	333	1.43	361	1.67	428	2.30	428	2.30

P-K
COMPACT 400®
STEAM TO WATER

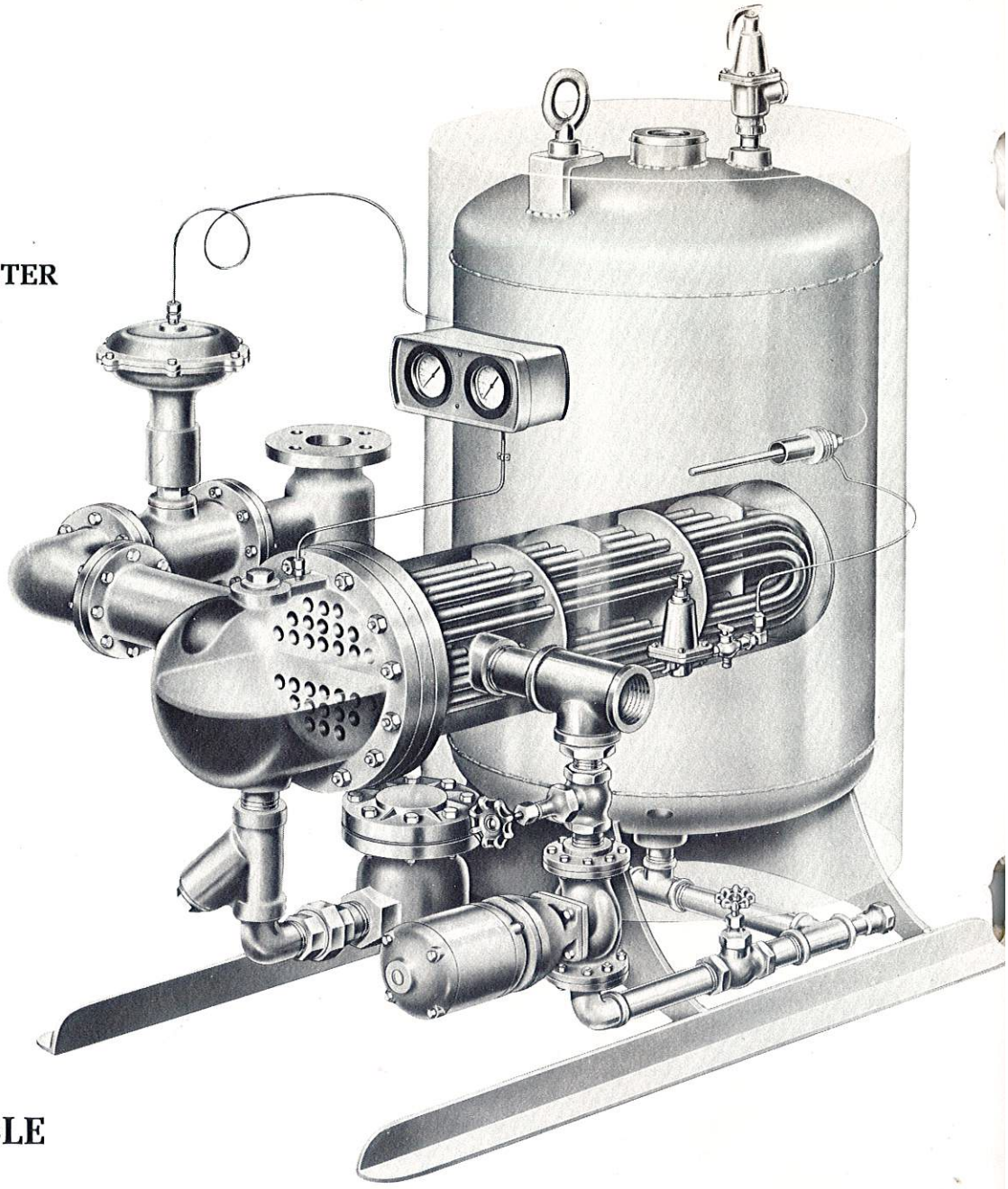

BOOSTER HEATER TABLE

140°-180° F

TEMP. RANGE	SIZE HEATER	STEAM LINE PRESSURE PSIG																	
		2		5		10		15		25		40		50		75		100	
		STEAM PRESSURE IN HEATING SECTION PSIG																	
		0		2		5		10		15		25		30		50		65	
		GPM	PD	GPM	PD	GPM	PD	GPM	PD	GPM	PD	GPM	PD	GPM	PD	GPM	PD	GPM	PD
140° TO 180°	401-16	13	.17	17	.26	21	.41	28	.68	34	.98	43	1.49	46	1.69	48	1.79	48	1.79
	402-16	25	.36	31	.52	38	.79	48	1.18	54	1.50	65	1.22	70	1.39	74	1.55	74	1.55
	403-18	52	.77	62	1.08	73	1.43	87	1.07	98	1.36	118	1.92	124	2.13	124	2.13	124	2.13
	404-20	68	1.36	77	1.08	89	1.44	107	2.01	121	2.57	130	2.93	130	2.93	130	2.93	130	2.93
	405-20	96	1.16	109	1.47	126	1.23	151	1.71	156	1.82	156	1.82	156	1.82	156	1.82	156	1.82
	406-24	117	1.09	134	1.39	155	1.85	178	2.40	178	2.40	178	2.40	178	2.40	178	2.40	178	2.40
	407-24	148	1.24	168	1.58	195	1.23	233	1.72	245	1.89	245	1.89	245	1.89	245	1.89	245	1.89
	408-24	180	1.19	205	1.52	238	2.02	264	2.46	264	2.46	264	2.46	264	2.46	264	2.46	264	2.46
	409-30	220	1.68	240	1.98	278	1.05	320	1.36	320	1.36	320	1.36	320	1.36	320	1.36	320	1.36
	410-30	259	1.61	295	2.05	330	1.00	408	1.49	427	1.62	427	1.62	427	1.62	427	1.62	427	1.62
	411-36	303	1.70	330	1.99	336	.62	438	1.00	496	1.26	496	1.26	496	1.26	496	1.26	496	1.26
	412-36	357	1.58	406	2.01	428	2.22	523	.97	638	1.40	661	1.50	661	1.50	661	1.50	661	1.50

NOTE: The G.P.M. rating of all tables is based on the indicated steam pressure in the heating section. The temperature control valves have been sized on the basis of supplying the required steam pressure using the indicated saturated steam pressure in the steam line before the control valve. All ratings are based on the use of high-quality, saturated steam.

RAISED SUP'T. DETAIL
54"HG. x 20"ϕ
C-43928
36"HG. x 24"ϕ
C-44243

STEAM TO WATER

COMPACT 400® DIMENSION DATA

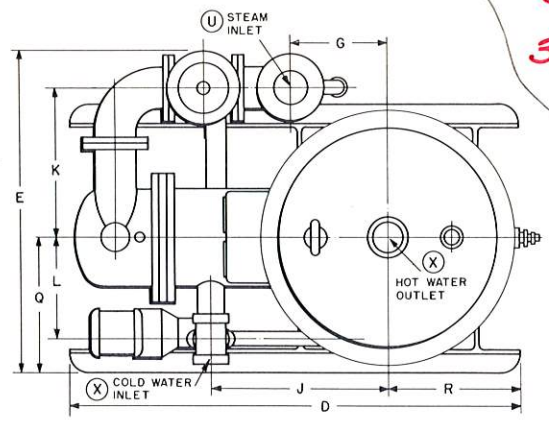

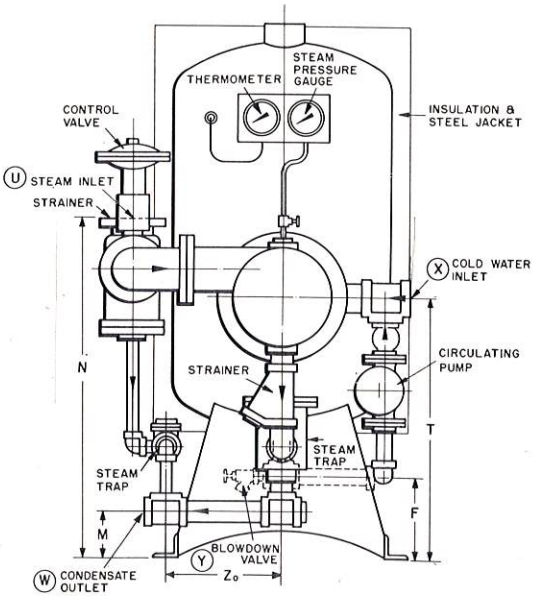

Pipe condensate without lifts to vented or vacuum receiver at lower level.

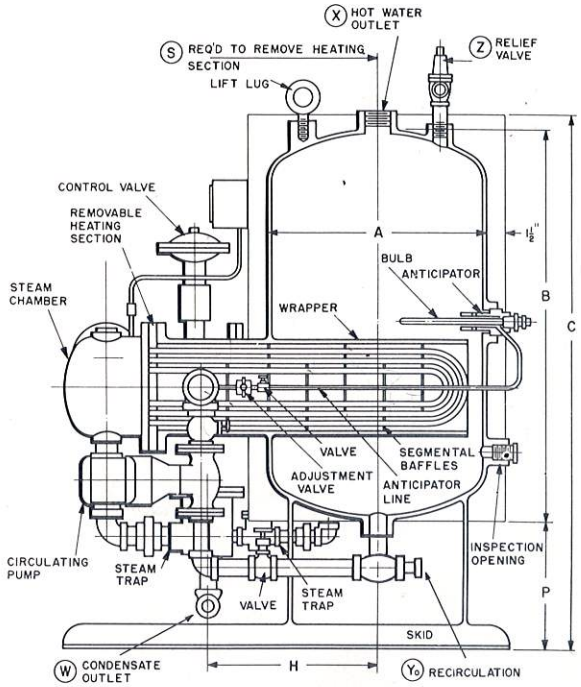

DIMENSION TABLE I. ROUGHING IN DIMENSIONS ONLY DIMENSIONS IN INCHES

UNIT SIZE	A DIA.	B	C	D	E*	F	G*	H	J	K*	L	M	N	P	Q	R	S	T	U** STEAM CONN.	Zo	Yo	W COND. OUTLET	X WATER	Y BLOW DOWN	Z RELIEF VALVE
401-16	16	33	51	39	27	8	5	15	14½	13	12½	6	33	16	10	10	38	26	2½	13	1¼	1½	3	¾	¾
402-16	16	33	51	39	27	8	5	15	14½	13	12½	6	33	16	10	10	44	26	2½	13	1¼	1½	3	¾	¾
403-18	18	34	52	41	30	8	5½	15½	14¼	14¼	13½	6	37	16	11	11	45	29	3	14¼	1¼	1½	3	¾	1
404-20	20	35	53	45	35	8	2½	16	14⅛	18½	14½	6	38½	16	12	12	42	29	4	18½	1½	2	3	¾	1¼
405-20	20	35	53	45	35	8	2½	16	14⅛	18½	14½	6	38½	16	12	12	47	29	4	18½	1½	2	3	¾	1¼
406-24	24	39	57	52	39	8	3	22	19	18¾	14½	6	44	16	14	14	47	32	5	18¾	1½	2	4	¾	1¼
407-24	24	39	57	52	39	8	3	22	19	18¾	14½	6	44	16	14	14	53	32	5	18¾	1½	2	5†	¾	2
408-24	24	39	57	52	39	8	3	22	19	18¾	14½	6	44	16	14	14	60	32	5	18¾	1½	2	5†	¾	2
409-30	30	40	58	59	47	8	3½	26	21⅝	24	15½	6	46	16	17	17	63	33½	6	24	1½	2½	6†	¾	2
410-30	30	40	58	59	47	8	3½	26	21⅝	24	15½	6	46	16	17	17	70	33½	6	24	1½	2½	6†	¾	2
411-36	36	48	66	64	51	8	5½	27	23½	25	17¼	6	53	16	20	20	66	40	6	25	1½	3	8†	¾	2
412-36	36	48	66	64	51	8	5½	27	23½	25	17¼	6	53	16	20	20	72	40	6	25	1½	3	8†	¾	2

*VARIES IF OTHER THAN STANDARD VALVE IS USED. **"U" DIMENSION VARIES WITH SIZE OF STEAM CONTROL VALVE.
†CONNECTIONS SHOWN ARE MAXIMUM. CONNECTIONS OVER 3" I.P.S. ARE 150 lb. FLANGED.

STORAGE GAL
27
35
45
73
120
198

BOILER WATER SECTION

COMPACT 400 CAPACITIES IN G.P.M. — PRESSURE DROP IN P.S.I.

40° F INLET WATER

TEMP. RANGE	RECOVERY SECTION SIZE	BOILER WATER														
		180 TO 160					190 TO 170					200 TO 180				
		DOMESTIC WATER		BOILER WATER		TUBE PASS	DOMESTIC WATER		BOILER WATER		TUBE PASS	DOMESTIC WATER		BOILER WATER		TUBE PASS
		GPM	PD	GPM	PD		GPM	PD	GPM	PD		GPM	PD	GPM	PD	
40 TO 120	401-16	5	.03	20	4.3	6	6	.05	26	2.4	4	8	.07	32	3.5	4
	402-16	11	.09	45	3.3	4	10	.08	43	.48	2	16	.1	64	1.0	2
	403-18	21	.1	84	3.6	4	28	.25	115	1.0	2	42	.3	169	2.1	2
	404-20	37	.4	149	1.9	2	42	.6	169	2.4	2	42	.5	169	2.4	2
	405-20	40	.2	162	.76	2	64	.6	256	1.8	2	71	.4	285	2.2	2
	406-24	71	.9	285	2.5	2	71	.4	285	2.4	2	71	.7	285	2.4	2
	407-24	66	.3	266	.92	2	107	.7	428	2.2	2	107	.4	428	2.2	2
	408-24	107	.7	428	2.5	2	107	.5	428	2.5	2	107	.5	428	2.4	2
	409-30	129	.7	516	2.5	2	129	.7	516	2.5	2	129	.3	516	2.5	2
	410-30	129	.4	516	2.7	2	129	.2	516	2.7	2	129	.2	516	2.7	2
	411-36	174	.7	699	2.5	2	174	.7	699	2.5	2	174	.7	699	2.5	2
	412-36	174	.4	699	2.8	2	174	.4	699	2.7	2	174	.1	699	2.7	2
40 TO 140	401-16	1	.01	8	.92	6	2	.01	13	2.1	6	3	.02	18	1.2	4
	402-16	4	.02	22	2.5	6	6	.03	30	1.5	4	9	.06	47	3.5	4
	403-18	10	.04	50	1.3	4	17	.1	84	3.6	4	17	.1	87	.61	2
	404-20	17	.1	84	4.1	4	20	.1	104	1.0	2	34	.4	169	2.4	2
	405-20	22	.09	113	2.4	4	28	.1	142	3.6	4	37	.2	189	1.0	2
	406-24	29	.1	147	.73	2	51	.5	259	2.0	2	57	.6	285	2.4	2
	407-24	37	.1	189	3.0	4	42	.1	214	3.7	4	63	.3	318	1.2	2
	408-24	42	.1	214	4.2	4	75	.3	375	1.9	2	85	.3	428	2.4	2
	409-30	51	.1	258	4.3	4	80	.3	402	1.5	2	103	.4	516	2.5	2
	410-30	59	.1	296	.97	2	103	.3	516	2.7	2	103	.3	516	2.7	2
	411-36	70	.1	349	4.3	4	106	.2	530	1.5	2	140	.4	699	2.5	2
	412-36	75	.1	379	.89	2	133	.2	669	2.5	2	140	.3	699	2.7	2
40 TO 160	401-16											1	.01	9	1.1	6
	402-16											4	.01	24	3.1	6
	403-18						6	.02	38	2.4	6	10	.04	59	1.8	4
	404-20	5	.01	30	4.1	8	9	.04	58	2.0	4	14	.08	84	4.0	4
	405-20	6	.01	39	2.1	8	14	.04	86	4.3	6	22	.09	136	3.3	4
	406-24	12	.03	72	3.5	6	23	.1	142	4.1	4	30	.2	181	1.0	2
	407-24	10	.01	64	2.6	8	21	.04	129	4.3	6	35	.1	214	3.7	4
	408-24	17	.02	102	3.2	6	35	.09	214	4.2	4	43	.1	259	.96	2
	409-30						38	.07	230	3.4	4	47	.1	282	.8	2
	410-30	18	.02	109	2.6	6	41	.06	246	4.3	4	60	.1	365	1.4	2
	411-36						50	.07	305	3.3	4	61	.1	371	.76	2
	412-36						55	.05	331	3.0	4	75	.1	454	1.2	2
40 TO 180	401-16															
	402-16															
	403-18															
	404-20											4	.01	33	2.1	6
	405-20											7	.01	48	3.2	8
	406-24											10	.03	74	1.2	4
	407-24											11	.01	80	3.8	8
	408-24											17	.02	120	4.3	6
	409-30											19	.02	136	3.8	6
	410-30											19	.01	136	1.4	4
	411-36															
	412-36															

BOILER WATER																			
210 TO 190					220 TO 200					230 TO 210					240 TO 220				
DOMESTIC WATER		BOILER WATER		TUBE PASS	DOMESTIC WATER		BOILER WATER		TUBE PASS	DOMESTIC WATER		BOILER WATER		TUBE PASS	DOMESTIC WATER		BOILER WATER		TUBE PASS
GPM	PD	GPM	PD		GPM	PD	GPM	PD		GPM	PD	GPM	PD		GPM	PD	GPM	PD	
9	.09	36	.73	2	12	.1	50	1.3	2	16	.2	64	2.1	2	16	.2	64	2.0	2
22	.3	91	2.0	2	23	.3	95	2.1	2	23	.2	95	2.1	2	23	.2	95	2.1	2
42	.5	169	2.1	2	42	.3	169	2.1	2	42	.3	169	2.1	2	42	.3	169	2.1	2
42	.3	169	2.4	2	42	.3	169	2.3	2	42	.3	169	2.3	2	42	.3	169	2.3	2
71	.4	285	2.2	2	71	.4	285	2.1	2	71	.4	285	2.1	2	71	.4	285	2.1	2
71	.4	285	2.4	2	71	.4	285	2.4	2	71	.4	285	2.4	2	71	.4	285	2.4	2
107	.4	428	2.2	2	107	.4	428	2.2	2	107	.4	428	2.2	2	107	.4	428	2.1	2
107	.5	428	2.4	2	107	.5	428	2.4	2	107	.5	428	2.4	2	107	.5	428	2.4	2
129	.3	516	2.4	2	129	.3	516	2.4	2	129	.3	516	2.4	2	129	.3	516	2.4	2
129	.2	516	2.7	2	129	.2	516	2.7	2	129	.2	516	2.6	2	129	.2	516	2.6	2
174	.2	699	2.1	2	174	.2	699	2.4	2	174	.2	699	2.4	2	174	.2	699	2.4	2
174	.1	699	2.7	2	174	.1	699	2.7	2	174	.1	699	2.7	2	174	.1	699	2.6	2
5	.03	27	2.6	4	6	.05	32	3.4	4	7	.06	37	.75	2	10	.1	50	1.3	2
9	.07	48	.6	2	14	.1	69	1.1	2	19	.2	95	2.1	2	19	.2	95	2.1	2
26	.2	131	1.3	2	34	.3	169	2.1	2	34	.3	169	2.1	2	34	.2	169	2.1	2
34	.4	169	2.4	2	34	.2	169	2.3	2	34	.2	169	2.3	2	34	.2	169	2.3	2
57	.5	285	2.2	2	57	.3	285	2.1	2	57	.3	285	2.1	2	57	.3	285	2.1	2
57	.3	285	2.4	2	57	.3	285	2.4	2	57	.3	285	2.4	2	57	.3	285	2.4	2
85	.5	428	2.2	2	85	.2	428	2.2	2	85	.2	428	2.2	2	85	.2	428	2.1	2
85	.3	428	2.4	2	85	.3	428	2.4	2	85	.3	428	2.4	2	85	.3	428	2.4	2
103	.4	516	2.4	2	103	.2	516	2.4	2	103	.2	516	2.4	2	103	.2	516	2.4	2
103	.1	516	2.7	2	103	.1	516	2.7	2	103	.1	516	2.6	2	103	.1	516	2.6	2
140	.4	699	2.5	2	140	.4	699	2.4	2	140	.1	699	2.4	2	140	.1	699	2.4	2
140	.3	699	2.7	2	140	.09	699	2.7	2	140	.1	699	2.7	2	140	.1	699	2.6	2
2	.01	15	2.5	6	3	.01	19	1.3	4	4	.03	28	2.7	4	5	.03	29	.48	2
5	.03	34	1.9	4	7	.04	47	3.5	4	8	.06	53	.7	2	12	.1	74	1.3	2
14	.07	84	3.5	4	16	.1	99	.78	2	24	.2	148	1.65	2	28	.2	169	2.1	2
20	.1	125	1.3	2	28	.2	169	2.3	2	28	.1	169	2.3	2	28	.1	169	2.3	2
24	.1	144	.6	2	37	.2	223	1.3	2	47	.3	285	2.1	2	47	.2	285	2.1	2
47	.4	285	2.4	2	47	.2	285	2.4	2	47	.2	285	2.4	2	47	.2	285	2.4	2
39	.1	236	.72	2	62	.2	373	1.7	2	71	.3	428	2.2	2	71	.2	428	2.1	2
71	.3	428	2.4	2	71	.2	428	2.4	2	71	.2	428	2.4	2	71	.2	428	2.4	2
81	.3	489	2.2	2	86	.3	516	2.4	2	86	.3	516	2.4	2	86	.1	516	2.4	2
86	.2	516	2.7	2	86	.2	516	2.7	2	86	.1	516	2.6	2	86	.1	516	2.6	2
104	.2	629	2.0	2	116	.3	699	2.4	2	116	.3	699	2.4	2	116	.3	699	2.4	2
116	.2	699	2.7	2	116	.2	699	2.7	2	116	.2	699	2.7	2	116	.06	699	2.6	2
					1	.01	9	.37	4	2	.01	16	2.9	6	3	.01	22	1.6	4
2	.01	15	1.3	6	4	.01	28	3.8	6	5	.02	38	2.3	4	6	.03	47	3.4	4
6	.02	44	3.1	6	9	.04	68	2.3	4	12	.05	84	3.5	4	16	.1	117	1.0	2
9	.04	68	2.7	4	12	.06	88	.69	2	20	.1	146	1.8	2	24	.2	169	2.3	2
12	.03	85	1.3	4	20	.07	142	3.6	4	24	.1	169	.8	2	36	.2	258	1.7	2
20	.1	142	4.1	4	31	.2	223	1.5	2	40	.3	285	2.4	2	40	.1	285	2.4	2
20	.03	140	1.6	4	30	.07	214	3.6	4	39	.1	278	.97	2	61	.2	428	2.1	2
30	.07	214	4.1	4	45	.1	318	1.4	2	61	.2	428	2.4	2	61	.1	428	2.4	2
30	.07	258	4.1	4	48	.1	340	1.1	2	73	.2	516	2.4	2	73	.2	516	2.4	2
32	.03	226	.57	2	62	.1	438	1.9	2	73	.1	516	2.6	2	73	.1	516	2.6	2
50	.06	349	4.2	4	63	.1	447	1.0	2	100	.2	699	2.4	2	100	.2	699	2.4	2
47	.04	334	4.3	4	78	.1	547	1.7	2	100	.1	699	2.7	2	100	.1	699	2.6	2

COMPACT 400 CAPACITIES IN G.P.M.—PRESSURE DROP IN P.S.I.

50°F INLET WATER

TEMP. RANGE	RECOVERY SECTION SIZE	BOILER WATER														
		180 TO 160					190 TO 170					200 TO 180				
		DOMESTIC WATER		BOILER WATER		TUBE PASS	DOMESTIC WATER		BOILER WATER		TUBE PASS	DOMESTIC WATER		BOILER WATER		TUBE PASS
		GPM	PD	GPM	PD		GPM	PD	GPM	PD		GPM	PD	GPM	PD	
50 TO 120	401-16	5	.04	20	1.4	4	8	.08	31	3.3	4	8	.08	30	.51	2
	402-16	13	.1	47	3.6	4	14	.1	49	.62	2	21	.2	73	1.3	2
	403-18	23	.09	80	3.3	4	37	.4	129	1.3	2	48	.7	169	2.1	2
	404-20	46	.7	162	2.2	2	48	.4	169	2.4	2	48	.4	169	2.4	2
	405-20	49	.3	173	.87	2	81	.9	285	2.2	2	81	.6	285	2.2	2
	406-24	81	1.1	285	2.5	2	81	.6	285	2.4	2	81	.6	285	2.4	2
	407-24	81	.4	284	1.0	2	122	.9	428	2.2	2	122	.5	428	2.2	2
	408-24	122	.9	428	2.5	2	122	.6	428	2.5	2	122	.6	428	2.4	2
	409-30	147	.9	516	2.5	2	147	.9	516	2.5	2	147	.3	516	2.5	2
	410-30	147	.6	516	2.7	2	147	.2	516	2.7	2	147	.2	516	2.7	2
	411-36	199	.8	699	2.5	2	199	.8	699	2.5	2	199	.8	699	2.9	2
	412-36	199	.5	699	2.8	2	199	.6	699	2.7	2	199	.1	699	2.7	2
50 TO 140	401-16	2	.01	9	1.0	6	3	.01	15	2.7	6	4	.02	20	1.5	4
	402-16	5	.02	23	2.9	6	7	.04	34	1.9	4	10	.08	47	3.5	4
	403-18	11	.05	53	1.5	4	18	.1	84	3.6	4	20	.1	93	.69	2
	404-20	18	.1	84	4.1	4	24	.2	110	1.0	2	37	.4	169	2.4	2
	405-20	27	.1	123	2.8	4	31	.1	142	3.6	4	46	.3	207	1.2	2
	406-24	33	.2	151	.77	2	61	.6	274	2.3	2	63	.7	285	2.4	2
	407-24	45	.1	203	3.4	4	47	.1	214	3.7	4	74	.3	337	1.4	2
	408-24	48	.1	218	.7	2	86	.5	390	2.1	2	95	.3	428	2.4	2
	409-30	57	.1	258	4.3	4	93	.3	422	1.7	2	114	.5	516	2.5	2
	410-30	68	.1	309	1.0	2	114	.3	516	2.7	2	114	.3	516	2.7	2
	411-36	77	.1	349	4.3	4	123	.3	554	1.6	2	155	.5	699	2.5	2
	412-36	88	.1	396	.96	2	155	.3	699	2.7	2	155	.3	699	2.7	2
50 TO 160	401-16						1	.01	6	.45	6	1	.01	10	1.2	6
	402-16						2	.01	14	1.0	6	4	.02	27	3.6	6
	403-18						7	.02	40	2.6	6	11	.05	63	2.0	4
	404-20	5	.01	31	4.4	8	11	.05	61	2.2	4	15	.09	84	4.0	4
	405-20	7	.01	40	2.2	8	15	.04	86	4.3	6	25	.1	142	3.6	4
	406-24	13	.04	73	3.7	6	25	.1	142	4.1	4	34	.2	187	1.1	2
	407-24	12	.01	65	2.7	8	21	.04	120	1.2	4	38	.1	214	3.7	4
	408-24	18	.03	104	3.3	6	38	.1	214	4.2	4	48	.1	267	1.0	2
	409-30	20	.02	111	2.7	6	44	.1	244	3.8	4	53	.1	292	.85	2
	410-30	24	.02	133	4.2	6	44	.06	246	4.3	4	69	.1	379	1.5	2
	411-36						57	.08	314	3.5	4	69	.1	383	.8	2
	412-36						60	.06	331	4.3	4	88	.1	488	1.4	2
50 TO 180	401-16															
	402-16															
	403-18															
	404-20											5	.2	34	2.2	6
	405-20											7	.01	50	3.4	8
	406-24											11	.4	75	1.2	4
	407-24											12	.01	82	4.0	8
	408-24											18	.03	121	4.3	6
	409-30											21	.02	139	4.0	6
	410-30											21	.02	139	1.4	4
	411-36															
	412-36															

BOILER WATER 20° DROP

BOILER WATER																			
210 TO 190					220 TO 200					230 TO 210					240 TO 220				
DOMESTIC WATER		BOILER WATER		TUBE PASS	DOMESTIC WATER		BOILER WATER		TUBE PASS	DOMESTIC WATER		BOILER WATER		TUBE PASS	DOMESTIC WATER		BOILER WATER		TUBE PASS
GPM	PD	GPM	PD		GPM	PD	GPM	PD		GPM	PD	GPM	PD		GPM	PD	GPM	PD	
12	.1	42	.96	2	16	.2	58	1.7	2	18	.3	64	2.1	2	18	.3	64	2.1	2
27	.4	95	2.1	2	27	.2	95	2.1	2	27	.2	95	2.1	2	27	.2	95	2.1	2
48	.7	169	2.1	2	48	.3	169	2.1	2	48	.3	169	2.1	2	48	.3	169	2.1	2
48	.4	169	2.4	2	48	.4	169	2.4	2	48	.4	169	2.4	2	48	.4	169	2.4	2
81	.6	285	2.1	2	81	.6	285	2.1	2	81	.6	285	2.1	2	81	.6	285	2.1	2
81	.6	285	2.4	2	81	.6	285	2.4	2	81	.6	285	2.4	2	81	.6	285	2.4	2
122	.5	428	2.2	2	122	.5	428	2.2	2	122	.5	428	2.2	2	122	.5	428	2.1	2
122	.6	428	2.4	2	122	.6	428	2.4	2	122	.6	428	2.4	2	122	.6	428	2.4	2
147	.3	516	2.4	2	147	.3	516	2.4	2	147	.3	516	2.4	2	147	.3	516	2.4	2
147	.2	516	2.7	2	147	.2	516	2.7	2	147	.2	516	2.6	2	147	.2	516	2.6	2
199	.2	699	2.5	2	199	.2	699	2.4	2	199	.2	699	2.4	2	199	.2	699	2.4	2
199	.1	699	2.7	2	199	.1	699	2.7	2	199	.1	699	2.7	2	199	.1	699	2.6	2
6	.05	31	3.2	4	6	.05	31	.53	2	9	.09	42	.94	2	12	.1	57	1.6	2
11	.09	53	.71	2	17	.2	76	1.4	2	21	.2	95	2.1	2	21	.2	95	2.1	2
32	.3	145	1.6	2	37	.4	169	2.1	2	37	.4	169	2.1	2	37	.2	169	2.1	2
37	.3	169	2.4	2	37	.3	169	2.4	2	37	.3	169	2.4	2	37	.3	169	2.4	2
63	.6	285	2.2	2	63	.3	285	2.1	2	63	.3	285	2.1	2	63	.3	285	2.1	2
63	.3	285	2.4	2	63	.3	285	2.4	2	63	.3	285	2.4	2	63	.3	285	2.4	2
95	.6	428	2.2	2	95	.3	428	2.2	2	95	.3	428	2.2	2	95	.3	428	2.1	2
95	.3	428	2.4	2	95	.3	428	2.4	2	95	.3	428	2.4	2	95	.3	428	2.4	2
114	.5	516	2.4	2	114	.2	516	2.4	2	114	.2	516	2.4	2	114	.2	516	2.4	2
114	.1	516	2.7	2	114	.1	516	2.7	2	114	.1	516	2.6	2	114	.1	516	2.6	2
155	.5	699	2.5	2	155	.5	699	2.4	2	155	.1	699	2.4	2	155	.1	699	2.4	2
155	.3	699	2.7	2	155	.1	699	2.7	2	155	.1	699	2.7	2	155	.1	699	2.6	2
3	.01	16	2.9	6	4	.02	22	1.7	4	5	.04	32	3.4	4	6	.04	32	.57	2
6	.03	37	2.2	4	8	.05	47	3.5	4	10	.08	58	.83	2	15	.1	83	1.6	2
15	.08	84	3.5	4	19	.1	106	.87	2	29	.2	161	1.9	2	30	.3	169	2.1	2
23	.2	131	1.4	2	30	.3	169	2.4	2	30	.2	169	2.4	2	30	.2	169	2.4	2
27	.1	150	.65	2	42	.2	235	1.5	2	51	.4	285	2.1	2	51	.2	285	2.1	2
51	.5	285	2.4	2	51	.2	285	2.4	2	51	.2	285	2.4	2	51	.2	285	2.4	2
44	.1	246	.77	2	70	.3	390	1.8	2	77	.4	428	2.2	2	77	.2	428	2.1	2
77	.4	428	2.4	2	77	.2	428	2.4	2	77	.2	428	2.4	2	77	.2	428	2.4	2
93	.3	516	2.4	2	93	.3	516	2.4	2	93	.1	516	2.4	2	93	.1	516	2.4	2
93	.2	516	2.7	2	93	.2	516	2.7	2	93	.1	516	2.6	2	93	.1	516	2.6	2
121	.3	668	2.3	2	127	.3	699	2.4	2	127	.3	699	2.4	2	127	.1	699	2.4	2
127	.2	699	2.7	2	127	.2	699	2.7	2	127	.2	699	2.7	2	127	.07	699	2.6	2
1		6	.56	6	1	.01	11	1.5	6	2	.01	18	3.5	6	3	.02	23	1.9	4
2	.01	16	1.4	6	4	.02	29	4.3	6	6	.03	41	2.7	4	6	.03	45	.5	2
7	.02	47	3.6	6	11	.05	73	2.6	4	12	.06	80	.51	2	19	.1	123	1.1	2
11	.05	73	3.0	4	14	.08	92	.73	2	23	.2	152	1.9	2	26	.2	169	2.4	2
13	.03	88	1.4	4	21	.08	142	3.6	4	27	.1	177	.87	2	42	.2	274	2.0	2
21	.1	142	4.1	4	35	.2	230	1.6	2	43	.3	285	2.4	2	43	.1	285	2.4	2
23	.04	149	1.8	4	32	.08	214	3.6	4	46	.1	299	1.1	2	65	.3	428	2.1	2
32	.08	214	4.1	4	50	.1	329	1.4	2	65	.3	428	2.4	2	65	.2	428	2.4	2
39	.08	258	4.1	4	55	.1	362	1.2	2	79	.2	516	2.4	2	79	.2	516	2.4	2
36	.04	239	.63	2	69	.1	452	2.1	2	79	.1	516	2.6	2	79	.1	516	2.6	2
53	.07	349	4.2	2	71	.1	462	1.1	2	107	.2	699	2.4	2	107	.2	699	2.4	2
51	.04	334	4.3	2	87	.1	568	1.8	2	107	.1	699	2.7	2	107	.1	699	2.6	2

COMPACT 400 CAPACITIES IN G.P.M. — PRESSURE DROP IN P.S.I.

60° F INLET WATER

TEMP. RANGE	RECOVERY SECTION SIZE	BOILER WATER														
		180 TO 160					190 TO 170					200 TO 180				
		DOMESTIC WATER		BOILER WATER		TUBE PASS	DOMESTIC WATER		BOILER WATER		TUBE PASS	DOMESTIC WATER		BOILER WATER		TUBE PASS
		GPM	PD	GPM	PD		GPM	PD	GPM	PD		GPM	PD	GPM	PD	
60 TO 120	401-16	8	.07	23	2.0	4	10	.1	32	3.5	4	11	.1	35	.68	2
	402-16	15	.1	47	3.6	4	18	.2	55	.77	2	28	.4	85	1.7	2
	403-18	28	.2	85	.6	2	48	.7	146	1.6	2	56	.9	169	2.1	2
	404-20	56	1.0	169	2.4	2	56	.6	169	2.5	2	56	.6	169	2.4	2
	405-20	62	.5	186	1.0	2	95	1.2	285	2.2	2	95	.7	285	2.2	2
	406-24	95	1.5	285	2.5	2	95	.8	285	2.5	2	95	.8	285	2.4	2
	407-24	104	.7	314	1.2	2	142	1.2	428	2.2	2	142	.7	428	2.2	2
	408-24	142	.8	428	2.5	2	142	.8	428	2.5	2	142	.8	428	2.4	2
	409-30	172	1.1	516	2.5	2	172	.4	516	2.5	2	172	.4	516	2.5	2
	410-30	172	.8	516	2.7	2	172	.3	516	2.7	2	172	.3	516	2.7	2
	411-36	233	1.1	699	2.5	2	233	1.1	699	2.5	2	233	.3	699	2.5	2
	412-36	233	.7	699	2.8	2	233	.7	699	2.7	2	233	.2	699	2.7	2
60 TO 140	401-16	2	.01	10	1.2	6	4	.02	17	3.3	6	5	.04	23	1.9	4
	402-16	6	.03	25	3.4	6	9	.06	37	2.2	4	11	.09	47	3.5	4
	403-18	14	.07	56	1.7	4	21	.1	84	3.6	4	24	.2	99	.79	2
	404-20	21	.1	84	4.1	4	30	.3	120	1.3	2	42	.6	169	2.4	2
	405-20	32	.1	128	3.0	4	35	.1	142	3.6	4	54	.4	219	1.3	2
	406-24	38	.3	155	.77	2	71	.8	285	2.4	2	71	.4	285	2.4	2
	407-24	53	.2	214	3.7	4	53	.1	214	3.7	4	89	.5	356	1.5	2
	408-24	56	.2	224	.74	2	103	.6	413	2.3	2	107	.4	428	2.4	2
	409-30	58	.1	235	.57	2	113	.5	453	1.9	2	129	.6	516	2.5	2
	410-30	80	.1	322	1.1	2	129	.4	516	2.7	2	129	.4	516	2.7	2
	411-36	87	.1	349	4.3	4	145	.4	580	1.7	2	174	.6	699	2.5	2
	412-36	103	.1	412	1.0	2	174	.4	699	2.7	2	174	.4	699	2.7	2
60 TO 160	401-16						1	.01	6	.47	6	2	.01	11	1.3	6
	402-16						3	.01	16	3.3	8	5	.02	28	4.1	6
	403-18						8	.03	42	2.8	6	13	.06	66	2.2	4
	404-20	5	.01	28	1.6	6	12	.06	63	2.3	4	15	.1	77	.56	2
	405-20	8	.01	40	2.3	8	17	.05	87	4.3	6	28	.1	142	3.6	4
	406-24	14	.05	74	3.7	6	28	.1	142	4.1	4	38	.2	192	1.1	2
	407-24	13	.02	67	2.8	8	24	.05	124	1.3	4	42	.1	214	3.7	4
	408-24	21	.04	105	3.4	6	42	.1	214	4.2	4	55	.2	276	1.0	2
	409-30	22	.03	112	2.7	6	49	.1	248	3.9	4	60	.1	300	.89	2
	410-30	26	.02	134	4.3	6	49	.08	246	4.3	4	78	.1	394	1.6	2
	411-36						66	.1	331	3.9	4	78	.1	394	.85	2
	412-36						66	.07	331	4.3	4	101	.1	507	1.5	2
60 TO 180	401-16															
	402-16															
	403-18															
	404-20											5	.01	35	2.3	6
	405-20											8	.01	51	3.5	8
	406-24											12	.04	76	1.3	4
	407-24											14	.02	83	4.2	8
	408-24											20	.03	121	4.3	6
	409-30											24	.03	146	4.3	6
	410-30											23	.02	141	1.5	4
	411-36															
	412-36															

BOILER WATER																			
210 TO 190					220 TO 200					230 TO 210					240 TO 220				
DOMESTIC WATER		BOILER WATER		TUBE PASS	DOMESTIC WATER		BOILER WATER		TUBE PASS	DOMESTIC WATER		BOILER WATER		TUBE PASS	DOMESTIC WATER		BOILER WATER		TUBE PASS
GPM	PD	GPM	PD		GPM	PD	GPM	PD		GPM	PD	GPM	PD		GPM	PD	GPM	PD	
17	.2	50	1.3	2	21	.4	64	2.1	2	21	.4	64	2.1	2	21	.4	64	2.1	2
31	.6	95	2.1	2	31	.3	95	2.1	2	31	.3	95	2.1	2	31	.3	95	2.1	2
56	.5	169	2.1	2	56	.5	169	2.1	2	56	.5	169	2.1	2	56	.5	169	2.1	2
56	.6	169	2.4	2	56	.6	169	2.4	2	56	.6	169	2.4	2	56	.6	169	2.4	2
95	.7	285	2.2	2	95	.6	285	2.1	2	95	.7	285	2.1	2	95	.7	285	2.1	2
95	.8	285	2.4	2	95	.8	285	2.4	2	95	.8	285	2.4	2	95	.8	285	2.4	2
142	.7	428	2.2	2	142	.7	428	2.2	2	142	.7	428	2.2	2	142	.7	428	2.1	2
142	.8	428	2.4	2	142	.8	428	2.4	2	142	.8	428	2.4	2	142	.8	428	2.4	2
172	.4	516	2.4	2	172	.4	516	2.4	2	172	.4	516	2.4	2	172	.4	516	2.4	2
172	.3	516	2.7	2	172	.3	516	2.7	2	172	.3	516	2.6	2	172	.3	516	2.6	2
233	.3	699	2.5	2	233	.3	699	2.4	2	233	.3	699	2.4	2	233	.3	699	2.4	2
233	.2	699	2.7	2	233	.2	699	2.7	2	233	.2	699	2.7	2	233	.2	699	2.6	2
8	.07	32	3.5	4	8	.08	35	.66	2	12	.1	49	1.2	2	16	.2	64	2.1	2
14	.1	58	.85	2	21	.2	86	1.7	2	23	.3	95	2.1	2	23	.3	95	2.1	2
38	.4	155	1.8	2	42	.5	169	2.1	2	42	.2	169	2.1	2	42	.3	169	2.1	2
42	.3	169	2.4	2	42	.3	169	2.4	2	42	.3	169	2.4	2	42	.3	169	2.4	2
71	.7	285	2.2	2	71	.4	285	2.1	2	71	.4	285	2.1	2	71	.4	285	2.1	2
71	.4	285	2.4	2	71	.4	285	2.4	2	71	.4	285	2.4	2	71	.4	285	2.4	2
107	.7	428	2.2	2	107	.4	428	2.2	2	107	.4	428	2.2	2	107	.4	428	2.1	2
107	.4	428	2.4	2	107	.4	428	2.4	2	107	.4	428	2.4	2	107	.4	428	2.4	2
129	.2	516	2.4	2	129	.2	516	2.4	2	129	.2	516	2.4	2	129	.2	516	2.4	2
129	.2	516	2.7	2	129	.2	516	2.7	2	129	.1	516	2.6	2	129	.2	516	2.6	2
174	.6	699	2.5	2	174	.2	699	2.4	2	174	.2	699	2.4	2	174	.2	699	2.4	2
174	.4	699	2.7	2	174	.1	699	2.7	2	174	.1	699	2.7	2	174	.1	699	2.6	2
3	.02	18	3.6	6	4	.03	24	2.0	4	6	.04	32	3.4	4	7	.05	36	.69	2
8	.05	41	2.7	4	9	.06	47	3.5	4	12	.1	62	.96	2	18	.2	91	1.9	2
17	.1	84	3.5	4	22	.1	112	.98	2	34	.3	169	2.1	2	34	.3	169	2.1	2
27	.2	138	1.6	2	34	.4	169	2.4	2	34	.2	169	2.4	2	34	.2	169	2.4	2
31	.1	156	.70	2	50	.3	253	1.7	2	57	.4	285	2.1	2	57	.3	285	2.1	2
57	.5	285	2.4	2	57	.3	285	2.4	2	57	.3	285	2.4	2	57	.3	285	2.4	2
5	.2	256	.84	2	82	.4	414	2.0	2	85	.4	428	2.2	2	85	.2	428	2.1	2
85	.4	428	2.4	2	85	.3	428	2.4	2	85	.3	428	2.4	2	85	.3	428	2.4	2
103	.4	516	2.4	2	103	.4	516	2.4	2	103	.1	516	2.4	2	103	.1	516	2.4	2
103	.3	516	2.7	2	103	.3	516	2.7	2	103	.1	516	2.6	2	103	.1	516	2.6	2
140	.4	699	2.5	2	140	.4	699	2.4	2	140	.4	699	2.4	2	140	.1	699	2.4	2
140	.3	699	2.7	2	140	.3	699	2.7	2	140	.3	699	2.7	2	140	.1	699	2.6	2
		7	.59	6	2	.01	12	1.6	6	3	.01	19	3.9	6	4	.02	25	2.2	4
2	.01	17	1.5	6	4	.02	27	1.2	4	7	.04	45	3.1	4	8	.04	47	.57	2
8	.03	49	3.8	6	12	.06	76	2.9	4	14	.07	84	.56	2	21	.1	130	1.2	2
12	.06	75	3.2	4	15	.09	95	.81	2	27	.2	162	2.2	2	28	.2	169	2.4	2
15	.04	91	1.5	4	23	.09	142	3.6	4	30	.1	184	.94	2	47	.3	285	2.1	2
23	.1	142	4.1	4	40	.3	243	1.8	2	46	.4	285	2.4	2	47	.2	285	2.4	2
25	.05	153	1.9	4	35	.09	214	3.6	4	51	.2	310	1.2	2	71	.3	428	2.1	2
35	.1	214	4.1	4	56	.2	338	1.5	2	71	.3	428	2.4	2	71	.2	428	2.4	2
43	.1	258	4.1	4	62	.1	372	1.3	2	86	.3	516	2.4	2	86	.3	516	2.4	2
40	.05	244	.66	2	77	.1	466	2.2	2	86	.2	516	2.6	2	86	.1	516	2.6	2
58	.08	349	4.2	4	81	.1	490	1.2	2	116	.3	699	2.4	2	116	.3	699	2.4	2
50	.04	303	.56	2	100	.1	605	2.0	2	116	.2	699	2.7	2	116	.2	699	2.6	2

COMPACT 400 CAPACITIES IN G.P.M. — PRESSURE DROP IN P.S.I.

70° F INLET WATER

TEMP. RANGE	RECOVERY SECTION SIZE	BOILER WATER														
		180 TO 160					190 TO 170					200 TO 180				
		DOMESTIC WATER		BOILER WATER		TUBE PASS	DOMESTIC WATER		BOILER WATER		TUBE PASS	DOMESTIC WATER		BOILER WATER		TUBE PASS
		GPM	PD	GPM	PD		GPM	PD	GPM	PD		GPM	PD	GPM	PD	
70 TO 120	401-16	11	.1	28	2.8	4	12	.1	32	3.5	4	16	.2	41	.90	2
	402-16	19	.2	47	3.6	4	25	.3	63	1.0	2	38	.8	95	2.1	2
	403-18	38	.4	96	.77	2	65	1.2	163	2.0	2	67	1.3	169	2.1	2
	404-20	67	1.4	169	2.4	2	67	.9	169	2.4	2	67	.9	169	2.4	2
	405-20	80	.9	201	1.1	2	114	1.7	285	2.2	2	114	1.1	285	2.2	2
	406-24	114	1.1	285	2.5	2	114	1.1	285	2.5	2	114	1.1	285	2.4	2
	407-24	134	1.1	336	1.4	2	171	1.7	428	2.2	2	171	1.0	428	2.2	2
	408-24	171	1.1	428	2.5	2	171	1.1	428	2.5	2	171	1.1	428	2.5	2
	409-30	206	1.6	516	2.5	2	206	.6	516	2.5	2	206	.6	516	2.5	2
	410-30	206	1.1	516	2.8	2	206	.4	516	2.7	2	206	.4	516	3.6	2
	411-36	279	1.6	699	2.5	2	279	1.6	699	2.5	2	279	.4	699	2.5	2
	412-36	279	1.0	699	2.8	2	279	.3	699	2.8	2	279	.3	699	2.7	2
70 TO 140	401-16	3	.01	11	1.4	6	5	.04	20	4.3	6	7	.06	27	2.5	4
	402-16	8	.05	28	4.1	6	11	.09	41	2.8	4	13	.1	47	3.5	4
	403-18	17	.1	61	2.0	4	24	.2	84	3.6	4	30	.3	107	.90	2
	404-20	24	.2	84	4.1	4	36	.4	127	1.4	2	48	.7	169	2.4	2
	405-20	39	.2	137	3.4	4	40	.1	142	3.7	4	66	.6	232	1.5	2
	406-24	45	.3	158	.81	2	81	1.1	285	2.4	2	81	.5	285	2.4	2
	407-24	61	.2	214	3.7	4	62	.2	216	.63	2	110	.7	385	1.8	2
	408-24	65	.3	229	.77	2	122	.9	428	2.5	2	122	.6	428	2.5	2
	409-30	68	.2	240	.60	2	134	.7	470	2.1	2	147	.8	516	2.5	2
	410-30	95	.2	335	1.2	2	147	.6	516	2.7	2	147	.6	516	2.7	2
	411-36	100	.2	349	4.3	4	177	.6	621	2.0	2	199	.8	699	2.5	2
	412-36	122	.2	429	1.1	2	199	.5	699	2.7	2	199	.5	699	2.7	2
70 TO 160	401-16						1	.01	6	.47	6	2	.01	11	1.6	6
	402-16						3	.01	17	3.7	8	6	.03	29	4.3	6
	403-18						9	.04	43	3.1	6	15	.08	69	2.5	4
	404-20	6	.02	29	1.6	6	14	.08	65	2.5	4	18	.07	82	3.8	4
	405-20	9	.02	41	2.4	8	19	.06	87	4.3	6	31	.1	142	3.6	4
	406-24	16	.06	75	3.8	6	31	.2	142	4.1	4	43	.3	197	1.2	2
	407-24	15	.02	67	2.9	8	28	.06	127	1.4	4	47	.1	214	3.7	4
	408-24	23	.04	106	3.4	6	47	.1	214	4.2	4	63	.2	283	1.1	2
	409-30	25	.03	113	2.8	6	57	.1	258	4.2	4	68	.2	308	.95	2
	410-30	30	.03	134	4.3	6	54	.1	246	4.3	4	90	.2	408	1.7	2
	411-36						74	.1	337	4.0	4	89	.2	404	.9	2
	412-36						73	.1	331	4.3	4	116	.2	526	1.6	2
70 TO 180	401-16															
	402-16															
	403-18															
	404-20											6	.02	36	2.4	6
	405-20											9	.02	52	3.6	8
	406-24											13	.04	76	1.3	4
	407-24											15	.02	85	4.3	8
	408-24											21	.04	120	4.3	6
	409-30											26	.03	145	4.3	6
	410-30											26	.02	143	1.5	4
	411-36															
	412-36															

BOILER WATER 20° F DROP

BOILER WATER																			
210 TO 190					220 TO 200					230 TO 210					240 TO 220				
DOMESTIC WATER		BOILER WATER		TUBE PASS	DOMESTIC WATER		BOILER WATER		TUBE PASS	DOMESTIC WATER		BOILER WATER		TUBE PASS	DOMESTIC WATER		BOILER WATER		TUBE PASS
GPM	PD	GPM	PD		GPM	PD	GPM	PD		GPM	PD	GPM	PD		GPM	PD	GPM	PD	
24	.5	62	1.9	2	25	.6	64	2.1	2	25	.6	64	2.1	2	25	.6	64	2.1	2
38	.4	95	2.1	2	38	.4	95	2.1	2	38	.4	95	2.1	2	38	.4	95	2.1	2
67	.7	169	2.1	2	67	.7	169	2.1	2	67	.7	169	2.1	2	67	.7	169	2.1	2
67	.9	169	2.4	2	67	.9	169	2.3	2	67	.9	169	2.3	2	67	.9	169	2.4	2
114	1.1	285	2.2	2	114	1.1	285	2.2	2	114	1.1	285	2.2	2	114	1.1	285	2.1	2
114	1.1	285	2.4	2	114	1.1	285	2.4	2	114	1.1	285	2.4	2	114	1.1	285	2.4	2
171	1.0	428	2.2	2	171	1.0	428	2.2	2	171	1.0	428	2.2	2	171	1.0	428	2.2	2
171	1.1	428	2.4	2	171	1.1	428	2.4	2	171	1.1	428	2.4	2	171	1.1	428	2.4	2
206	.6	516	2.4	2	206	.6	516	2.4	2	206	.6	516	2.4	2	206	.6	516	2.4	2
206	.4	516	2.7	2	206	.4	516	2.7	2	206	.4	516	2.6	2	206	.4	516	2.6	2
279	.4	699	2.5	2	279	.4	699	2.5	2	279	.4	699	2.4	2	279	.4	699	2.4	2
279	.3	699	2.7	2	279	.3	699	2.7	2	279	.3	699	2.7	2	279	.3	699	2.6	2
9	.09	32	3.4	4	11	.1	39	.86	2	16	.2	57	1.6	2	18	.3	64	2.1	2
18	.2	64	1.0	2	27	.4	95	2.1	2	27	.4	95	2.1	2	27	.2	95	2.1	2
48	.7	169	2.1	2	48	.7	169	2.1	2	48	.3	169	2.1	2	48	.3	169	2.1	2
48	.4	169	2.4	2	48	.4	169	2.4	2	48	.4	169	2.4	2	48	.4	169	2.4	2
81	.9	285	2.2	2	81	.5	285	2.2	2	81	.5	285	2.2	2	81	.5	285	2.1	2
81	.5	285	2.4	2	81	.5	285	2.4	2	81	.5	285	2.4	2	81	.5	285	2.4	2
122	.5	428	2.2	2	122	.5	428	2.2	2	122	.5	428	2.2	2	122	.5	428	2.2	2
122	.6	428	2.4	2	122	.6	428	2.4	2	122	.6	428	2.4	2	122	.6	428	2.4	2
147	.3	516	2.5	2	147	.3	516	2.4	2	147	.3	516	2.4	2	147	.3	516	2.4	2
147	.2	516	2.7	2	147	.2	516	2.7	2	147	.2	516	2.6	2	147	.2	516	2.6	2
199	.8	699	2.5	2	199	.2	699	2.5	2	199	.2	699	2.4	2	199	.2	699	2.4	2
199	.1	699	2.7	2	199	.1	699	2.7	2	199	.1	699	2.7	2	199	.1	699	2.6	2
4	.02	20	4.3	6	6	.04	27	2.5	4	7	.05	32	3.4	4	8	.08	40	.86	2
10	.07	45	3.2	4	10	.07	46	.51	2	15	.1	70	1.2	2	21	.2	95	2.1	2
18	.1	84	3.5	4	27	.2	123	1.1	2	37	.4	169	2.1	2	37	.4	169	2.1	2
33	.3	148	1.8	2	37	.4	169	2.4	2	37	.3	169	2.4	2	37	.3	169	2.4	2
36	.2	162	.73	2	60	.5	271	1.9	2	63	.3	285	2.2	2	63	.3	285	2.1	2
63	.7	285	2.4	2	63	.3	285	2.4	2	63	.3	285	2.4	2	63	.3	285	2.4	2
59	.2	266	.90	2	95	.5	428	2.2	2	95	.3	428	2.2	2	95	.3	428	2.2	2
95	.5	428	2.4	2	95	.3	428	2.4	2	95	.3	428	2.4	2	95	.3	528	2.4	2
114	.5	516	2.5	2	114	.5	516	2.4	2	114	.2	516	2.4	2	114	.2	516	2.4	2
114	.3	516	2.7	2	114	.1	516	2.7	2	114	.1	516	2.6	2	114	.1	516	2.6	2
155	.5	699	2.5	2	155	.5	699	2.5	2	155	.5	699	2.4	2	155	.1	699	2.4	2
155	.3	699	2.7	2	155	.3	699	2.7	2	155	.1	699	2.7	2	155	.1	699	2.6	2
1	.01	7	.65	6	2	.01	12	1.8	6	3	.01	18	1.2	4	5	.03	28	2.7	4
3	.01	18	1.7	6	5	.02	28	1.3	4	8	.05	47	3.4	4	9	.06	51	.65	2
9	.03	51	4.1	6	14	.08	81	3.2	4	16	.09	87	.60	2	24	.2	137	1.4	2
14	.07	77	3.4	4	18	.1	98	.86	2	30	.3	169	2.4	2	30	.2	169	2.4	2
17	.05	93	1.6	4	25	.1	142	3.6	4	34	.2	191	1.0	2	51	.4	285	2.1	2
25	.1	142	4.1	4	45	.3	248	1.8	2	51	.4	285	2.4	2	51	.2	285	2.4	2
28	.06	157	2.0	4	38	.1	214	3.6	4	58	.2	321	1.3	2	77	.4	428	2.2	2
38	.1	214	4.1	4	63	.2	347	1.6	2	77	.2	428	2.4	2	77	.2	428	2.4	2
46	.1	258	4.1	4	69	.2	382	1.3	2	93	.3	516	2.4	2	93	.3	516	2.4	2
45	.06	248	.69	2	89	.2	492	2.4	2	93	.2	516	2.6	2	93	.1	516	2.6	2
63	.1	349	4.2	4	91	.2	503	1.3	2	127	.3	699	2.4	2	127	.3	699	2.4	2
56	.05	308	.60	2	113	.2	624	2.2	2	127	.2	699	2.7	2	127	.2	699	2.6	2

COMPACT 400 CAPACITIES IN G.P.M.—PRESSURE DROP IN P.S.I.

40° F INLET WATER — **BOILER WATER 40° F DROP**

TEMP. RANGE	RECOVERY SECTION SIZE	BOILER WATER 200 TO 160					210 TO 170					220 TO 180					230 TO 190					240 TO 200				
		DOMESTIC WATER		BOILER WATER		TUBE PASS	DOMESTIC WATER		BOILER WATER		TUBE PASS	DOMESTIC WATER		BOILER WATER		TUBE PASS	DOMESTIC WATER		BOILER WATER		TUBE PASS	DOMESTIC WATER		BOILER WATER		TUBE PASS
		GPM	PD	GPM	PD		GPM	PD	GPM	PD		GPM	PD	GPM	PD		GPM	PD	GPM	PD		GPM	PD	GPM	PD	
40 TO 120	401-16	5	.04	11	1.4	6	8	.07	16	2.8	6	10	.1	20	4.3	6	12	.1	24	2.1	4	16	.2	32	3.4	4
	402-16	14	.1	28	4.0	6	15	.1	31	1.6	4	22	.3	45	3.2	4	23	.3	47	3.5	4	23	.2	47	3.4	4
	403-18	27	.2	55	1.6	4	42	.5	84	3.5	4	42	.5	84	3.5	4	42	.5	85	.60	2	61	1.1	122	1.1	2
	404-20	42	.6	84	4.1	4	42	.3	84	4.0	4	63	1.3	127	1.4	2	84	2.2	169	2.3	2	84	2.2	169	2.3	2
	405-20	62	.5	124	2.8	4	71	.7	142	3.6	4	71	.4	142	3.6	4	93	1.2	187	1.0	2	122	2.0	245	1.6	2
	406-24	71	.4	142	4.1	4	101	1.7	201	1.3	2	128	2.7	257	1.9	2	137	1.6	275	2.2	2	142	1.7	285	2.4	2
	407-24	102	.7	204	3.4	4	107	.7	214	3.7	4	107	.4	214	3.6	4	152	1.4	303	1.1	2	185	2.1	370	1.6	2
	408-24	107	.5	214	4.2	4	145	1.3	290	1.2	2	211	2.6	423	2.4	2	214	1.7	428	2.4	2	214	1.7	428	2.4	2
	409-30	129	.7	258	4.2	4	156	1.0	313	1.0	2	232	2.0	464	2.0	2	240	2.2	480	2.1	2	240	2.2	480	2.1	2
	410-30	146	.6	293	.95	2	226	1.3	452	2.1	2	258	1.7	516	2.7	2	258	1.7	516	2.7	2	258	.7	516	2.6	2
	411-36	174	.7	349	4.2	4	204	.9	409	.90	2	301	1.8	603	1.9	2	330	2.2	661	2.2	2	330	2.2	661	2.2	2
	412-36	187	.5	375	.86	2	283	1.1	567	1.8	2	349	1.6	699	2.7	2	349	1.6	699	2.7	2	349	1.6	699	2.7	2
40 TO 140	401-16	2	.01	5	.40	6	3	.01	7	.73	6	4	.02	11	1.5	6	6	.05	16	2.9	6	7	.06	18	1.2	4
	402-16	5	.03	14	2.5	8	8	.05	19	2.0	6	11	.1	29	4.3	6	13	.1	34	1.9	4	19	.2	47	3.4	4
	403-18	13	.07	34	1.9	6	21	.1	52	4.3	6	25	.2	63	2.0	4	34	.3	84	3.5	4	34	.3	84	3.5	4
	404-20	19	.1	49	1.5	4	32	.3	81	3.7	4	34	.4	84	4.0	4	40	.5	100	.86	2	56	1.0	141	1.6	2
	405-20	30	.1	76	3.4	6	36	.2	91	1.6	4	57	.4	142	3.6	4	57	.3	142	3.6	4	61	.5	152	.65	2
	406-24	49	.4	124	3.2	4	57	.6	142	4.1	4	64	.7	160	.8	2	94	1.5	237	1.7	2	114	2.1	285	2.4	2
	407-24	51	.2	127	4.2	6	61	.2	153	1.9	4	85	.5	214	3.7	4	85	.2	214	3.6	4	99	.6	249	.77	2
	408-24	69	.3	174	2.8	4	85	.4	214	4.2	4	93	.5	233	.77	2	137	1.1	344	1.6	2	171	1.7	428	2.4	2
	409-30	76	.2	191	2.4	4	103	.4	258	4.2	4	98	.4	244	.60	2	151	.9	377	1.3	2	206	1.6	516	2.4	2
	410-30	98	.3	247	4.4	4	98	.2	247	4.3	4	137	.5	342	1.2	2	206	1.1	516	2.7	2	206	1.1	516	2.6	2
	411-36	100	.2	252	2.3	4	140	.4	349	4.2	4	140	.4	349	4.2	4	192	.8	480	1.2	2	279	1.6	699	2.4	2
	412-36	125	.2	313	3.8	4	133	.2	333	4.3	4	175	.4	439	1.1	2	205	.9	663	2.4	2	279	1.0	699	2.7	2
40 TO 160	401-16											1	.01	5	.43	6	2	.01	8	.86	6	4	.02	12	1.7	6
	402-16						3	.01	9	1.1	8	5	.02	16	3.2	8	7	.04	22	2.5	6	10	.07	29	4.3	6
	403-18						9	.03	27	2.8	8	13	.07	40	2.6	6	16	.09	48	1.2	4	24	.2	72	2.5	4
	404-20	8	.03	25	2.9	8	14	.08	44	3.6	6	20	.1	59	2.1	4	28	.2	84	4.0	4	28	.1	84	3.9	4
	405-20	10	.02	31	1.3	8	17	.06	52	1.7	6	29	.1	87	4.3	6	36	.2	108	2.1	4	47	.3	142	3.5	4
	406-24	18	.07	56	2.2	6	28	.1	85	1.6	4	47	.4	142	4.1	4	47	.4	142	4.1	4	63	.7	191	1.1	2
	407-24	17	.03	52	1.7	8	29	.07	86	2.0	6	43	.1	130	4.3	6	58	.2	176	2.5	4	71	.3	214	3.6	4
	408-24	26	.05	79	2.0	6	40	.1	121	1.4	4	71	.3	214	4.5	4	71	.2	214	4.1	4	92	.5	276	1.0	2
	409-30	29	.04	87	1.6	6	44	.1	132	1.2	4	76	.2	229	3.3	4	86	.3	258	4.1	4	100	.4	301	.86	2
	410-30	35	.04	106	2.7	6	55	.1	166	2.0	4	82	.2	248	4.3	4	90	.2	271	.81	2	135	.5	405	1.6	2
	411-36						65	.1	195	4.3	6	101	.2	303	3.1	4	116	.3	349	4.2	4	131	.3	394	.81	2
	412-36						71	.08	213	1.8	4	111	.2	334	4.3	4	115	.2	347	.73	2	173	.4	521	1.5	2
40 TO 180	401-16																1	.01	4	.22	6	1	.01	6	.51	6
	402-16																3	.01	11	1.6	8	5	.02	18	3.8	8
	403-18																9	.03	32	3.7	8	13	.06	45	3.2	6
	404-20											9	.03	31	4.2	8	14	.08	49	4.3	6	19	.1	68	2.6	4
	405-20											11	.02	39	2.1	8	18	.06	63	2.3	6	23	.09	81	1.2	4
	406-24											20	.09	71	3.3	6	30	.1	106	2.3	4	40	.3	142	4.0	4
	407-24											18	.03	64	2.5	8	30	.07	106	2.9	6	38	.1	133	1.5	4
	408-24											28	.06	101	3.1	6	43	.1	151	2.1	4	61	.2	214	4.1	4
	409-30											30	.05	107	2.4	6	45	.1	160	1.7	4	73	.2	258	4.1	4
	410-30											37	.05	131	4.0	6	57	.1	201	2.9	4	71	.1	250	4.3	4
	411-36											40	.04	141	2.3	6	60	.09	211	1.6	4	100	.2	349	4.1	4
	412-36											48	.04	169	3.7	6	74	.09	259	2.6	4	96	.1	337	4.3	4

COMPACT 400 CAPACITIES IN G.P.M. — PRESSURE DROP IN P.S.I.

50° F INLET WATER

BOILER WATER 40° F DROP

TEMP. RANGE	RECOVERY SECTION SIZE	BOILER WATER 200 TO 160					210 TO 170					220 TO 180					230 TO 190					240 TO 200				
		DOMESTIC WATER		BOILER WATER		TUBE PASS	DOMESTIC WATER		BOILER WATER		TUBE PASS	DOMESTIC WATER		BOILER WATER		TUBE PASS	DOMESTIC WATER		BOILER WATER		TUBE PASS	DOMESTIC WATER		BOILER WATER		TUBE PASS
		GPM	PD	GPM	PD		GPM	PD	GPM	PD		GPM	PD	GPM	PD		GPM	PD	GPM	PD		GPM	PD	GPM	PD	
50 TO 120	401-16	7	.06	12	1.8	6	10	.1	19	3.8	6	11	.1	20	1.5	4	16	.2	29	2.8	4	18	3	32	3.4	4
	402-16	16	.2	29	4.3	6	20	.2	35	2.1	4	27	.4	47	3.5	4	27	.4	47	3.5	4	30	.5	53	.7	2
	402-18	35	.4	62	2.0	4	48	.7	84	3.5	4	48	.7	84	3.5	4	54	.9	95	.73	2	77	1.7	135	1.3	2
	404-20	48	.7	84	4.1	4	53	.9	93	.77	2	79	1.9	138	1.6	2	97	2.8	169	2.3	2	97	1.7	169	2.3	2
	405-20	77	.8	136	3.3	4	81	.6	142	3.6	4	81	.6	142	3.6	4	117	1.8	205	1.1	2	122	2.0	215	1.3	2
	406-24	81	.6	142	4.1	4	123	2.5	215	1.4	2	128	2.7	224	1.5	2	163	2.1	285	2.4	2	163	2.1	285	2.4	2
	407-24	122	.9	214	3.7	4	122	.5	214	3.7	4	129	1.0	225	.65	2	185	2.1	324	1.3	2	190	1.2	333	1.3	2
	408-24	122	.6	214	4.2	4	177	1.9	310	1.3	2	211	2.6	370	1.9	2	244	2.3	428	2.4	2	244	2.2	428	2.4	2
	409-30	147	.9	258	4.2	4	192	1.4	336	1.1	2	240	2.2	420	1.6	2	240	2.2	420	1.6	2	295	1.3	516	2.4	2
	410-30	178	.8	312	1.0	2	281	2.0	493	2.5	2	295	2.2	516	2.7	2	295	2.2	516	2.7	2	295	.9	516	2.6	2
	411-36	199	.8	349	4.3	4	252	1.3	441	1.0	2	330	2.2	579	1.7	2	330	2.2	579	1.7	2	330	2.2	579	1.7	2
	412-36	229	.7	400	1.0	2	357	1.7	625	2.2	2	399	2.1	699	2.7	2	399	2.1	699	2.7	2	399	2.1	699	2.7	2
50 TO 140	401-16	2	.01	5	.43	6	3	.02	8	.86	6	5	.04	13	1.9	6	8	.07	18	3.7	6	9	.1	20	1.5	4
	402-16	7	.04	16	3.1	8	9	.07	22	2.5	6	13	.12	29	4.3	6	16	.1	37	2.2	4	21	.2	47	3.4	4
	403-18	16	.09	36	2.2	6	23	.2	52	4.3	6	30	.3	68	2.3	4	37	.4	84	3.5	4	37	.4	84	3.5	4
	404-20	23	.2	52	1.6	4	37	.4	84	4.0	4	37	.3	84	4.0	4	47	.7	106	1.0	2	68	3.5	154	1.9	2
	405-20	36	.2	83	4.0	6	42	.2	96	1.7	4	63	.6	142	3.6	4	63	.3	142	3.6	4	71	.7	161	.73	2
	406-24	57	.6	128	3.4	4	63	.7	142	4.1	4	74	.9	167	.86	2	113	2.0	254	1.9	2	126	4.9	285	2.4	2
	407-24	57	.2	129	4.3	6	71	.3	161	2.2	4	95	.6	214	3.7	4	95	.3	214	3.6	4	117	.8	264	.9	2
	408-24	83	.4	186	3.2	4	95	.3	214	4.2	4	108	.7	243	.86	2	165	1.6	372	1.9	2	190	2.1	428	2.4	2
	409-30	88	.3	199	2.6	4	114	.5	258	4.2	4	113	.5	256	.65	2	176	1.2	397	1.5	2	229	1.9	516	2.4	2
	410-30	109	.3	246	4.3	4	109	.3	247	4.3	4	166	.7	373	1.4	2	229	1.3	516	2.7	2	229	1.3	516	2.6	2
	411-36	116	.3	262	2.5	4	155	.5	349	4.2	4	148	.5	333	.60	2	231	1.1	521	1.4	2	311	1.9	699	2.4	2
	412-36	146	.3	330	4.3	4	148	.3	333	4.3	4	206	.6	465	1.3	2	311	1.3	699	2.7	2	311	1.3	699	2.7	2
50 TO 160	401-16						1	.01	3	.20	6	2	.01	6	.43	6	3	.01	9	1.0	6	5	.03	13	2.0	6
	402-16						3	.01	10	1.3	8	6	.03	17	3.7	8	8	.05	24	2.9	6	10	.07	28	1.3	4
	403-18						10	.04	29	3.2	8	15	.09	42	2.9	6	18	.1	51	1.3	4	27	.25	76	2.8	4
	404-20	9	.04	26	3.1	8	16	.1	46	3.9	6	22	.2	62	2.2	4	30	.3	84	4.0	4	30	.2	84	3.9	4
	405-20	7	.01	21	.73	8	20	.07	54	1.8	6	32	.1	87	4.3	6	41	.2	113	2.3	4	51	.4	142	3.5	4
	406-24	20	.09	57	2.2	6	31	.2	87	1.6	4	51	.5	142	2.5	4	51	.2	142	4.1	4	74	.9	205	1.3	2
	407-24	19	.03	53	1.8	8	32	.08	90	2.2	6	47	.1	130	4.3	6	68	.3	189	2.9	4	77	.4	214	3.6	4
	408-24	29	.07	81	2.0	6	45	.1	124	1.5	4	77	.4	214	4.1	4	77	.2	214	4.1	4	105	.7	288	1.1	2
	409-30	32	.05	88	1.7	6	49	.1	135	1.3	4	88	.3	244	3.7	4	93	.3	258	4.1	4	114	.5	313	.95	2
	410-30	39	.05	109	2.8	6	62	.1	172	2.2	4	90	.2	248	4.3	4	102	.3	282	.86	2	154	.6	425	1.8	2
	411-36	42	.05	116	1.6	6	64	.1	178	1.2	4	114	.3	314	3.4	4	127	.3	349	4.2	4	149	.5	410	.9	2
	412-36	50	.04	140	2.6	6	80	.1	221	2.0	4	121	.2	334	4.3	4	131	.2	362	.77	2	199	.5	547	1.7	2
50 TO 180	401-16																1	.01	4	.22	6	2	.01	6	.56	6
	402-16																3	.01	12	1.7	8	6	.03	19	4.3	8
	403-18											5	.01	17	1.2	8	10	.04	33	4.1	8	15	.08	49	3.7	6
	404-20											9	.04	32	4.3	8	15	.09	49	4.4	6	22	.1	73	3.0	4
	405-20											12	.03	40	2.2	8	20	.07	67	2.6	6	26	.1	84	1.3	4
	406-24											22	.1	72	3.4	6	33	.2	108	2.4	4	43	.3	142	4.0	4
	407-24											20	.03	66	2.6	8	33	.09	109	3.1	6	42	.1	139	1.6	4
	408-24											31	.07	103	3.1	6	47	.1	155	2.2	4	65	.3	214	4.1	4
	409-30											33	.06	110	2.5	6	50	.1	165	1.8	4	79	.2	258	4.1	4
	410-30											41	.06	135	4.2	6	64	.1	209	3.1	4	77	.1	250	4.3	4
	411-36											44	.05	144	2.4	6	66	.1	217	1.7	4	107	.2	349	4.1	4
	412-36											53	.05	174	3.8	6	82	.1	269	2.8	4	103	.1	337	4.3	4

COMPACT 400 CAPACITIES IN G.P.M. — PRESSURE DROP IN P.S.I.

60° F INLET WATER

BOILER WATER 40° F DROP

TEMP. RANGE	RECOVERY SECTION SIZE	BOILER WATER 200 TO 160					210 TO 170					220 TO 180					230 TO 190					240 TO 200				
		DOMESTIC WATER		BOILER WATER		TUBE PASS	DOMESTIC WATER		BOILER WATER		TUBE PASS	DOMESTIC WATER		BOILER WATER		TUBE PASS	DOMESTIC WATER		BOILER WATER		TUBE PASS	DOMESTIC WATER		BOILER WATER		TUBE PASS
		GPM	PD	GPM	PD		GPM	PD	GPM	PD		GPM	PD	GPM	PD		GPM	PD	GPM	PD		GPM	PD	GPM	PD	
60 TO 120	401-16	10	.1	15	2.5	6	13	.1	20	4.3	6	16	.2	24	2.1	4	21	.4	32	3.4	4	21	.4	32	3.4	4
	402-16	18	.2	26	1.2	4	27	.4	41	2.7	4	31	.6	47	3.5	4	31	.3	47	3.5	4	40	.9	61	.9	2
	403-18	45	.6	68	2.4	4	56	.9	84	3.5	4	56	.5	84	.5	4	70	1 4	105	.86	2	86	2.1	130	1.3	2
	404-20	56	.6	84	4.1	4	66	1.4	99	.9	2	97	2.9	146	1.8		103	1.9	154	2.0	2	113	2.3	169	2.3	2
	405-20	95	1.2	142	3.7	4	95	.7	142	3.6	4	99	1.3	148	.65	2	122	2.0	184	.95	2	156	1.9	234	1.5	2
	406-24	95	.7	142	4.1	4	128	2.6	192	1.1	2	160	2.0	240	1.7		178	2.5	268	2.1	2	178	2.5	268	2.1	2
	407-24	142	1.2	214	3.7	4	142	.7	214	3.7	4	165	1.6	247	.77	2	185	2.0	278	.99	2	245	2.0	367	1.6	2
	408-24	142	.8	214	4.2	4	211	2.6	317	1.4	2	264	2.6	397	2.1	2	264	2.6	397	2.1	2	264	2.6	397	2.1	2
	409-30	172	1.1	258	4.2	4	240	2.1	360	1.2	2	240	2.1	360	1.2	2	286	1.2	430	1.7	2	320	1.5	480	2.1	2
	410-30	221	1.3	331	1.2	2	320	2.6	480	2.4	2	320	2.6	480	2.3	2	344	1.1	516	2.7	2	344	1.1	516	2.6	2
	411-36	233	1.1	350	4.3	4	315	2.0	473	1.2	2	330	2.1	496	1.3	2	330	2.1	496	1.3	2	408	.9	612	1.9	2
	412-36	283	1.1	425	1.0	2	428	2.4	642	2.3	2	428	2.4	642	2.3	2	428	2.4	642	2.3	2	466	.8	699	2.7	2
60 TO 140	401-16	3	.01	6	.43	6	5	.03	9	1.1	6	7	.06	15	2.5	6	10	.1	20	4.3	6	12	.1	24	1.9	4
	402-16	9	.05	17	3.6	8	12	.1	24	3.0	6	14	.1	28	1.3	4	21	.2	42	2.8	4	23	.3	47	3.4	4
	403-18	20	.1	40	2.6	6	23	.2	47	1.2	4	37	.4	75	2.8	4	42	.5	84	3.5	4	42	.3	84	3.5	4
	404-20	27	.2	55	1.8	4	42	.6	84	4.0	4	42	.3	84	4.0	4	57	1.0	114	1.1	2	84	2.2	169	2.3	2
	405-20	43	.3	87	4.3	6	52	.4	104	2.0	4	71	.7	142	3.6	4	71	.4	142	3.6	4	85	1.0	170	.8	2
	406-24	68	.8	136	3.8	4	71	.4	142	4.1	4	86	1.2	172	.95	2	128	2.6	257	1.9	2	129	1.3	258	.98	2
	407-24	64	.3	129	4.4	6	85	.4	170	2.4	4	107	.7	214	3.6	4	107	.4	214	3.6	4	142	1.2	285	1.0	2
	408-24	96	.6	193	3.4	4	107	.4	214	4.2	4	127	1.0	254	.9	2	194	2.2	388	2.0	2	214	1.7	428	2.4	2
	409-30	104	.4	208	2.8	4	129	.6	258	4.2	4	136	.7	273	.73	2	212	1.7	424	1.7	2	240	2.1	480	2.1	2
	410-30	123	.4	246	4.3	4	118	.4	237	.65	2	197	1.0	394	1.6	2	258	1.7	516	2.7	2	258	1.7	516	2.6	2
	411-36	136	.4	273	2.7	4	174	.6	349	4.2	4	178	.7	357	.69	2	272	1.5	544	1.5	2	330	2.1	661	2.2	2
	412-36	166	.4	332	4.3	4	166	.4	333	4.3	4	253	.9	507	1.5	2	349	1.6	699	2.7	2	349	1.6	699	2.7	2
60 TO 160	401-16						2	.01	4	.22	6	2	.01	6	.51	6	4	.4	10	1.2	6	6	.04	15	2.5	6
	402-16						5	.02	11	1.5	8	7	.04	19	4.2	8	10	.9	26	3.4	6	12	.1	30	1.5	4
	403-18	5	.01	14	.8	8	12	.06	31	3.5	8	18	.1	45	3.2	6	21	1.2	54	1.5	4	32	.3	82	3.3	4
	404-20	11	.05	27	3.2	8	19	.1	48	4.3	6	26	.2	65	2.5	4	34	.4	84	4.0	4	35	.4	89	.70	2
	405-20	12	.03	32	1.5	8	22	.1	56	1.9	6	35	.2	87	4.3	6	49	2.0	122	2.7	4	57	.4	142	3.5	4
	406-24	23	.1	57	2.3	6	35	.2	88	1.7	4	57	.5	142	4.1	4	57	.3	142	4.1	4	85	1.2	212	1.3	2
	407-24	21	.04	54	1.9	8	37	.1	93	2.3	6	48	.1	121	1.3	4	81	2.2	203	3.3	4	85	.4	214	3.6	4
	408-24	32	.08	82	2.1	6	51	.1	127	1.6	4	85	.4	214	4.1	4	85	1.6	214	4.1	4	123	.9	309	1.3	2
	409-30	35	.06	89	1.7	6	55	.1	138	1.3	4	99	.4	249	3.9	4	103	2.1	258	4.1	4	130	.6	326	1.0	2
	410-30	44	.06	111	3.0	6	73	.1	183	2.5	4	99	.2	248	4.3	4	117	1.8	294	.95	2	182	.8	457	2.1	2
	411-36	47	.06	117	1.7	6	72	.1	182	1.2	4	133	.4	333	3.8	4	140	2.1	349	4.2	4	170	.6	427	1.0	2
	412-36	57	.05	143	2.7	6	91	.1	228	2.1	4	139	.2	334	4.3	4	150	1.6	376	.86	2	230	.7	575	1.8	2
60 TO 180	401-16																1		4	.25	6	2	.01	7	.6	6
	402-16																4	.01	12	1.9	8	6	.03	18	1.7	6
	403-18											5	.01	17	1.2	8	11	.05	34	4.3	8	17	.1	51	4.1	6
	404-20											9	.04	29	1.6	6	14	.08	44	1.2	4	25	.2	76	3.2	4
	405-20											13	.03	41	2.3	8	23	.09	69	2.8	6	29	.1	87	1.4	4
	406-24											24	.12	73	3.5	6	37	.2	111	2.5	4	47	.4	142	4.0	4
	407-24											22	.04	67	2.8	8	34	.1	113	3.3	6	48	.1	144	1.7	4
	408-24											35	.09	105	3.3	6	53	.2	159	2.3	4	71	.3	214	4.1	4
	409-30											34	.07	112	2.6	6	56	.1	169	1.9	4	86	.3	258	4.1	4
	410-30											45	.07	136	4.3	6	74	.1	221	3.4	4	83	.2	250	4.3	4
	411-36											49	.06	147	2.5	6	74	.1	222	1.8	4	116	.3	349	4.1	4
	412-36											59	.06	178	4.1	6	92	.1	277	3.0	4	112	.2	337	4.3	4

COMPACT 400 CAPACITIES IN G.P.M. — PRESSURE DROP IN P.S.I.

70° F INLET WATER

BOILER WATER 40° F DROP

TEMP. RANGE	RECOVERY SECTION SIZE	BOILER WATER 200 TO 160					210 TO 170					220 TO 180					230 TO 190					240 TO 200				
		DOMESTIC WATER		BOILER WATER		TUBE PASS	DOMESTIC WATER		BOILER WATER		TUBE PASS	DOMESTIC WATER		BOILER WATER		TUBE PASS	DOMESTIC WATER		BOILER WATER		TUBE PASS	DOMESTIC WATER		BOILER WATER		TUBE PASS
		GPM	PD	GPM	PD		GPM	PD	GPM	PD		GPM	PD	GPM	PD		GPM	PD	GPM	PD		GPM	PD	GPM	PD	
70 TO 120	401-16	14	.2	17	3.4	6	16	.2	20	1.4	4	24	.5	30	3.1	4	25	.6	32	3.4	4	25	.5	31	.51	2
	402-16	24	.3	30	1.5	4	38	.8	47	3.5	4	38	.4	47	3.5	4	38	.8	48	.60	2	55	1.6	69	1.1	2
	403-18	61	1.1	76	3.0	4	67	1.3	84	3.5	4	67	.7	84	3.5	4	86	2.1	108	.90	2	91	1.2	113	1.0	2
	404-20	67	.9	84	4.1	4	88	2.3	110	1.0	2	99	1.8	123	1.3	2	130	3.0	162	2.2	2	130	3.0	162	2.2	2
	405-20	114	1.7	142	3.7	4	114	1.1	142	3.6	4	122	2.0	153	.69	2	150	1.8	188	1.0	2	156	1.9	195	1.0	2
	406-24	116	2.2	145	.70	2	138	1.6	173	.95	2	178	2.5	223	1.5	2	178	2.5	223	1.5	2	178	2.5	223	1.5	2
	407-24	171	1.7	214	3.7	4	171	1.0	214	3.7	4	185	2.0	231	.69	2	237	1.9	296	1.1	2	245	2.0	306	1.1	2
	408-24	172	1.8	216	.7	2	231	2.0	289	1.2	2	264	2.6	331	1.5	2	264	2.6	331	1.5	2	264	2.6	331	1.5	2
	409-30	206	.6	258	4.2	4	240	2.1	300	.9	2	267	1.0	334	1.0	2	320	1.5	400	1.5	2	320	1.5	400	1.5	2
	410-30	289	2.1	361	1.4	2	320	2.5	400	1.6	2	391	1.4	489	2.4	2	413	1.6	516	2.7	2	413	1.6	516	2.6	2
	411-36	279	1.6	349	4.3	4	330	2.1	413	.95	2	330	2.1	413	.95	2	406	.9	507	1.3	2	496	1.3	620	1.9	2
	412-36	374	1.8	468	1.3	2	428	2.3	535	1.6	2	428	2.3	535	1.6	2	559	1.1	699	2.7	2	559	1.1	699	2.7	2
70 TO 140	401-16	3	.02	6	.51	6	6	.04	10	1.3	6	9	.1	16	3.1	6	11	.1	19	1.3	4	16	.2	28	2.6	4
	402-16	10	.08	19	4.2	8	15	.1	27	3.7	6	17	.2	31	1.6	4	27	.4	47	3.5	4	27	.4	47	3.4	4
	403-18	24	.2	42	2.9	6	29	.2	50	1.3	4	46	.6	82	3.3	4	48	.7	84	3.5	4	50	.7	87	.6	2
	404-20	33	.3	57	1.9	4	48	.7	84	4.0	4	48	.4	84	4.0	4	71	1.6	125	1.3	2	97	2.8	169	2.3	2
	405-20	49	.3	87	4.4	6	63	.5	110	2.2	4	81	.9	142	3.6	4	81	.5	142	3.6	4	106	1.5	186	1.0	2
	406-24	81	1.1	142	4.1	4	81	.6	142	4.1	4	103	1.7	180	1.0	2	128	2.6	224	1.5	2	163	2.1	285	2.4	2
	407-24	74	.3	129	4.4	6	105	.7	185	2.8	4	122	.9	214	3.7	4	122	.5	214	3.6	4	176	1.8	308	1.1	2
	408-24	117	.8	204	3.8	4	122	.6	214	4.2	4	149	1.3	261	1.0	2	210	3.5	370	1.8	2	244	2.2	428	2.4	2
	409-30	127	.6	222	3.2	4	147	.8	258	4.2	4	161	1.0	281	.77	2	240	2.1	420	1.6	2	240	2.1	420	1.6	2
	410-30	140	.5	246	4.3	4	141	.5	247	.69	2	237	1.4	416	1.8	2	295	2.1	516	2.7	2	295	2.1	516	2.6	2
	411-36	162	.5	284	2.9	4	199	.8	348	4.2	4	210	.9	367	.73	2	330	2.1	579	1.7	2	330	2.1	579	1.7	2
	412-36	189	.5	331	4.3	4	190	.5	333	4.3	4	306	1.2	536	1.6	2	399	2.0	699	2.7	2	399	2.0	699	2.7	2
70 TO 160	401-16						1		3	.22	6	3	.01	6	.60	6	5	.03	11	1.4	6	7	.06	17	3.0	6
	402-16						5	.02	11	1.7	8	7	.04	17	1.6	6	12	.1	28	4.0	6	15	.1	34	1.8	4
	403-18	6	.02	14	.86	8	14	.07	32	3.8	8	21	.1	49	3.7	6	25	.2	57	1.6	4	37	.4	84	3.5	4
	404-20	12	.06	28	3.4	8	21	.1	48	4.3	6	30	.3	68	2.7	4	37	.4	84	4.0	4	41	.5	93	.77	2
	405-20	14	.04	32	1.5	8	26	.1	58	2.0	6	39	.2	87	4.3	6	56	.4	127	2.9	4	63	.5	142	3.5	4
	406-24	25	.13	57	2.3	6	40	.3	90	1.7	4	63	.7	142	4.1	4	63	.3	142	4.1	4	97	1.5	220	1.4	2
	407-24	24	.05	55	1.9	8	42	.1	96	2.5	6	55	.2	125	1.3	4	95	.5	214	3.6	4	95	.3	214	3.6	4
	408-24	36	.10	82	2.1	6	57	.2	130	1.6	4	95	.5	214	4.1	4	95	.3	214	4.1	4	142	1.2	321	1.4	2
	409-30	40	.08	90	1.8	6	62	.1	141	1.3	4	114	.5	258	4.1	4	114	.5	258	4.1	4	151	.8	339	1.1	2
	410-30	50	.08	113	3.1	6	84	.2	188	2.6	4	110	.3	248	4.3	4	135	.5	305	1.0	2	217	1.2	489	2.4	2
	411-36	52	.07	118	1.7	6	82	.1	185	1.3	4	155	.5	349	4.2	4	155	.5	349	4.2	4	197	.8	443	1.0	2
	412-36	64	.07	145	2.8	6	104	.1	235	2.2	4	148	.3	334	4.3	4	174	.4	391	.9	2	275	1.0	618	2.1	2
70 TO 180	401-16																1		4	.25	6	2	.01	7	.7	6
	402-16																5	.02	13	2.1	8	7	.04	19	1.9	6
	403-18											6	.02	18	1.3	8	11	.05	31	1.6	6	19	.1	53	4.3	6
	404-20											10	.04	29	1.6	6	16	.1	46	1.2	4	29	.3	81	3.6	4
	405-20											15	.04	41	2.4	8	26	.1	71	2.9	6	33	.1	91	1.5	4
	406-24											27	.1	74	3.6	6	41	.3	113	2.6	4	51	.4	142	4.0	4
	407-24											25	.05	68	2.8	8	42	.1	116	3.5	6	55	.2	153	1.9	4
	408-24											38	.1	106	3.4	6	59	.2	162	2.5	4	77	.4	214	4.1	4
	409-30											41	.08	113	2.7	6	63	.1	173	1.9	4	93	.3	258	4.1	4
	410-30											49	.08	137	4.3	6	82	.2	227	3.6	4	91	.2	250	4.3	4
	411-36											54	.07	149	2.5	6	82	.1	227	1.9	4	127	.3	349	4.1	4
	412-36											66	.07	182	4.2	6	104	.1	286	3.2	4	122	.2	337	4.3	4

HIGH TEMPERATURE WATER SECTION

COMPACT 400 CAPACITIES IN G.P.M. — H.T.W. CAPACITIES IN LBS. PER HOUR PRESSURE DROP IN P.S.I.

40° F INLET WATER

TEMP. RANGE	RECOVERY SECTION SIZE	HIGH TEMPERATURE WATER																										
		300 TO 240					325 TO 240					350 TO 240					380 TO 240					400 TO 240				
		DOMESTIC WATER		H.T.W. WATER		TUBE PASS	DOMESTIC WATER		H.T.W. WATER		TUBE PASS	DOMESTIC WATER		H.T.W. WATER		TUBE PASS	DOMESTIC WATER		H.T.W. WATER		TUBE PASS	DOMESTIC WATER		H.T.W. WATER		TUBE PASS
		GPM	PD	#/HR.	PD		GPM	PD	#/HR.	PD		GPM	PD	#/HR.	PD		GPM	PD	#/HR.	PD		GPM	PD	#/HR.	PD	
40 TO 120	401-16	26	.6	17521	4.9	4	26	.6	12444	2.5	4	27	.7	9713	1.6	4	35	1.1	9766	4.8	6	37	1.2	8949	4.1	6
	402-16	39	.5	25821	4.9	4	55	1.7	25605	4.9	4	55	1.7	19707	2 9	4	55	1.7	15402	1.8	4	57	1.0	13762	4.5	6
	403-18	83	2.0	54810	1.1	2	92	1.2	42350	4.2	4	93	1.3	33004	2.6	4	95	1.3	26398	1.7	4	97	1.4	23416	1.4	4
	404-20	114	2.4	74551	2.2	2	108	2.2	50041	1 0	2	105	2.1	37461	.6	2	130	3.1	36057	3.5	4	130	3.1	31427	2.7	4
	405-20	135	1.5	88775	1.0	2	156	2.0	71947	4.4	4	156	2.0	55374	2.7	4	156	2.0	43277	1.7	4	156	2.0	37719	1.3	4
	406-24	178	2.6	116902	2.0	2	178	2.6	82225	1.0	2	178	2.6	63285	.6	2	178	2.6	49459	.4	2	178	2.6	43108	.3	2
	407-24	211	1.5	138380	1.1	2	245	2.0	112690	4.8	4	245	2.0	86733	2.9	4	245	2 0	67785	1.8	4	245	2.0	59080	1.4	4
	408-24	264	2.6	173207	1.9	2	264	2.6	121828	1.0	2	264	2.6	93766	.6	2	264	2.6	73281	.4	2	264	2.6	63870	.3	2
	409-30	320	1.5	209688	2.0	2	306	1.4	141196	.9	2	320	1.5	113515	3.9	4	320	1.5	88715	2.4	4	320	1.5	77323	1.9	4
	410-30	427	1.7	279584	3.8	2	408	1.6	187974	1.8	2	406	1.6	143783	1.0	2	406	1.6	112441	.7	2	407	1.6	103097	.5	2
	411-36	356	.8	233063	1.4	2	339	.7	156072	.6	2	496	1.4	175707	5.1	4	496	1.4	137321	3.2	4	496	1.4	119686	2.5	4
	412-36	467	.8	306038	2.5	2	451	.8	207456	1.2	2	448	.8	158851	.7	2	661	1.6	183094	6.1	4	661	1.6	159582	4.7	4
40 TO 140	401-16	15	.2	12233	2.5	4	18	.3	10804	5.8	6	19	.4	8557	3.8	6	20	.4	7235	2.7	6	22	.4	6627	2.3	6
	402-16	31	.6	25821	4.9	4	32	.6	18600	2.6	4	33	.6	14763	1.7	4	43	1.0	14957	5.3	6	45	1.1	13717	4.5	6
	403-18	53	.4	43317	4.4	4	75	1.6	43398	4.4	4	75	1.6	33499	2.7	4	77	1.7	26735	1.8	4	80	1.8	24368	1.5	4
	404-20	86	2.3	70854	2 0	2	82	2.1	47509	.9	2	99	1.8	43897	5.1	4	105	2.0	36346	3.6	4	108	2.1	32593	2.9	4
	405-20	99	1.3	81461	.9	2	122	2.0	70662	4.2	4	123	1.2	54754	2.6	4	126	1.3	43831	1.7	4	156	1.9	47149	6.0	6
	406-24	140	1.6	114952	1.9	2	130	1.4	75004	.8	2	172	2.4	76457	5.6	4	178	2.5	61824	3.7	4	178	2.5	53885	2.9	4
	407-24	158	1.5	129555	1.0	2	188	1.2	108614	4.5	4	192	1.2	85113	2.8	4	197	1.3	68239	1.9	4	201	1.4	60614	1.5	4
	408-24	223	1.9	182961	2.2	2	214	1.7	123189	1.0	2	211	2.6	93766	.6	2	260	2.6	91601	3.7	4	264	2.6	79838	2.8	4
	409-30	240	2.1	196582	1.7	2	242	.9	139280	5.7	4	288	1.2	127693	4.9	4	300	1.3	103829	3.3	4	306	1.3	92348	2.6	4
	410-30	320	2.5	262110	3.3	2	320	2.5	184359	1.7	2	320	2.5	141893	1.0	2	379	1.4	131078	5.7	4	399	1.5	120482	4.9	4
	411-36	330	2.1	270476	1.8	2	330	2.1	190243	.9	2	330	2.1	146423	.6	2	330	2.1	114434	.4	2	336	.6	101488	1.8	4
	412-36	428	2.4	350374	3.3	2	428	2.4	246440	1.7	2	428	2.4	189675	1.0	2	428	2.4	148237	.6	2	432	.7	130422	3.2	4
40 TO 160	401-16	10	.2	10110	5.2	6	11	.2	7643	3.0	6	12	.1	6391	2.2	6	12	.2	5310	1.5	6	13	.2	4892	1.3	6
	402-16	19	.2	19062	2.8	4	20	.3	13981	1.5	4	26	.4	13850	4.5	6	277	.4	11477	3.2	6	29	.5	10526	2.7	6
	403-18	47	.6	46109	5.0	4	47	.6	32439	2.5	4	48	.7	25850	1 6	4	64	1.2	26568	5.3	6	67	1.3	24402	4.5	6
	404-20	54	.9	53479	1.2	2	61	.7	42466	4.8	4	82	2.0	43740	5.1	4	86	2.2	35780	3.5	4	91	2.5	32952	3.0	4
	405-20	75	2.4	73535	4.6	4	94	1.2	65290	3.7	4	97	1.2	51741	2.3	4	103	.9	42888	5.0	6	122	1.9	44455	5.3	6
	406-24	113	2.1	111756	1.8	2	111	1.0	76971	5.6	4	133	1.4	70884	4.8	4	139	1.6	57975	3.3	4	144	1.7	52145	2.7	4
	407-24	114	5	112499	4.8	4	154	1.4	106691	4.4	4	154	1.4	82262	2.7	4	159	.9	66204	5.3	6	185	2.0	67064	5.5	6
	408-24	170	1.7	167304	1.8	2	163	1.6	112919	.9	2	211	2.6	112519	5.4	4	222	1.8	92267	3.79	4	229	1.9	82927	3.1	4
	409-30	189	1.3	186278	1.6	2	175	1.2	121197	.7	2	240	2.1	127704	4.9	4	240	2.1	99805	3.1	4	240	2.1	86998	2.4	4
	410-30	246	1.5	241311	2.8	2	245	1.5	169197	1.4	2	236	1.4	125830	.8	2	320	2.5	133073	5.91	4	320	2.5	115984	4.5	4
	411-36	251	1.2	246432	1.5	2	231	1.1	159416	.6	2	330	2.1	175707	5.1	4	330	2.1	137321	3.2	4	330	2.1	119686	2.5	4
	412-36	321	1.3	315274	2.7	2	309	1.2	213737	1.3	2	307	1.2	163449	.8	2	428	2.3	177885	5.8	4	428	2.3	155041	4.5	4
40 TO 180	401-16	6	.1	7084	2.6	6	6	.1	5372	1.5	6	7	.1	4541	1.1	6	8	.1	3939	.9	6	8	.1	3666	.8	6
	402-16	12	.1	13834	1.5	4	15	.2	12206	3.6	6	16	.2	10257	2.6	6	20	.2	4820	5.6	8	21	.3	4410	4.7	8
	403-18	29	.3	33148	2.6	4	30	.3	24442	1.5	4	39	.5	24685	4.6	6	42	.5	20569	3.2	6	44	.6	18924	2.8	6
	404-20	35	.2	40765	4.4	4	52	.8	42381	4.8	4	55	.9	34301	3.2	4	57	1.0	27993	2.2	4	60	1.1	25464	1.8	4
	405-20	59	.5	68017	3.9	4	60	.5	49061	2.1	4	79	.8	49176	6.4	6	85	1.0	41614	4.7	6	90	1.1	38377	4.0	6
	406-24	73	.9	83742	1.0	2	95	1.5	76971	5.6	4	116	2.1	71941	5.0	4	122	2.3	59116	3.4	4	128	2.5	54222	2.9	4
	407-24	96	.6	110424	4.7	4	97	.6	78653	2.4	4	101	.6	63162	1.6	4	136	1.1	66126	5.3	6	144	1.2	60979	4.6	6
	408-24	107	.7	123451	1.0	2	143	1.2	115456	5.7	4	172	1.7	106554	4.9	4	179	1.8	86811	3.3	4	185	2.0	78288	2.7	4
	409-30	119	.6	136897	.9	2	173	1.1	139280	5.7	4	188	1.3	116766	4.1	4	199	1.5	96817	2.9	4	206	1.5	87244	2.4	4
	410-30	155	.6	178133	1.6	2	156	.6	125968	.8	2	223	1.2	138351	6.3	4	263	1.7	127714	5.4	4	272	1.8	114776	4.4	4
	411-36	157	.5	180178	.8	2	234	1.1	188761	5.8	4	249	1.2	154365	4.0	4	264	1.4	128137	2.8	4	273	1.4	115446	2.3	4
	412-36	202	.5	231352	1.5	2	203	.6	163387	.8	2	302	1.2	187502	6.4	4	336	1.4	162780	4.9	4	354	1.6	149800	4.2	4

Conversion of H.T.W. in #/hr. to G.P.M. at specific temperature	G.P.M. = $\frac{\#/hr.}{\text{Conversion Factor}}$	400° = 453 380° = 456 350° = 460	325° = 463 300° = 466

COMPACT 400 CAPACITIES IN G.P.M. — H.T.W. CAPACITIES IN LBS. PER HOUR PRESSURE DROP IN P.S.I.

50° F INLET WATER

TEMP. RANGE	RECOVERY SECTION SIZE	HIGH TEMPERATURE WATER																										
		300 TO 240					325 TO 240					350 TO 240					380 TO 240					400 TO 240				
		DOMESTIC WATER		H.T.W. WATER		TUBE PASS	DOMESTIC WATER		H.T.W. WATER		TUBE PASS	DOMESTIC WATER		H.T.W. WATER		TUBE PASS	DOMESTIC WATER		H.T.W. WATER		TUBE PASS	DOMESTIC WATER		H.T.W. WATER		TUBE PASS
		GPM	PD	#/HR.	PD		GPM	PD	#/HR.	PD		GPM	PD	#/HR.	PD		GPM	PD	#/HR.	PD		GPM	PD	#/HR.	PD	
50 TO 120	401-16	30	.8	17521	4.9	4	34	1.0	13963	3.2	4	34	1.0	10705	1.9	4	45	1.7	10928	6.0	6	46	1.8	9803	4.9	6
	402-16	46	1.2	26756	.8	2	55	1.7	22405	3.8	4	55	1.7	17244	2.3	4	55	1.7	13477	1.4	4	71	1.5	15143	5.4	6
	403-18	86	2.1	49714	.9	2	113	1.9	45816	4.9	4	116	2.0	36086	3.1	4	118	2.0	28589	2.0	4	119	2.0	25185	1.6	4
	404-20	130	3.1	74571	2.2	2	130	3.1	52451	1.1	2	130	3.1	40369	.7	2	124	2 8	31550	.4	2	124	2.8	27498	.3	2
	405-20	156	2 0	89503	1 1	2	150	1.8	60402	.5	2	156	2.0	48453	2.1	4	156	2.0	37867	1.3	4	156	2.0	33004	1.0	4
	406-24	178	2.5	102289	1.5	2	178	2.5	71947	.8	2	178	2.5	55374	.4	2	178	2.5	43277	.3	2	178	2.5	37719	.2	2
	407-24	245	2.0	140190	1.2	2	234	1.9	94541	.5	2	245	2.0	75892	2.3	4	245	2.0	59312	1.4	4	245	2.0	51695	1.1	4
	408-24	264	2.6	151556	1.5	2	264	2.6	106599	.8	2	264	2.6	82045	.5	2	264	2.6	64121	.3	2	264	2.6	55887	.2	2
	409-30	320	1.5	183477	1.5	2	320	1.5	129051	.8	2	320	1.5	99325	.5	2	320	1.5	77626	.3	2	320	1.5	67657	.2	2
	410-30	427	1.7	244636	2.9	2	427	1.7	172068	1.5	2	427	1.7	132434	.9	2	427	1.7	103501	.6	2	427	1.7	90210	.4	2
	411-36	461	1.2	264218	1.7	2	427	1.0	171913	.8	2	496	1.4	153744	4.0	4	496	1.4	120156	2.5	4	496	1.4	104725	1.9	4
	412-36	585	1.3	335201	3.0	2	572	1.3	230412	1.5	2	567	1.2	175839	.9	2	661	1.6	160208	4.8	4	661	1.6	139634	3.7	4
50 TO 140	401-16	18	.3	13817	3.1	4	18	.3	9796	1.6	4	24	.5	9578	4.7	6	25	.6	7908	3.2	6	26	.6	7229	2.7	6
	402-16	35	.7	25821	4.9	4	39	.9	20464	3.2	4	39	.9	15735	1.9	4	52	1.4	16189	6.1	6	53	1.6	14598	5.0	6
	403-18	62	.6	46109	5.0	4	86	2.1	44958	4.7	4	86	2.1	34602	2.9	4	86	2.1	27043	1.8	4	89	1.2	24338	4.5	6
	404-20	97	2.8	71908	2.1	2	97	2.8	50577	1.0	2	114	2.4	45510	5.5	4	124	2.8	38655	4.0	4	130	3.0	35355	3.4	4
	405-20	115	1.8	85260	1.0	2	142	1.6	73825	4.6	4	146	1.7	58323	2.9	4	148	1.7	46273	1.9	4	150	1.8	40797	1.5	4
	406-24	166	2.2	122202	2.1	2	153	1.9	79603	.9	2	178	2.5	71196	4.9	4	178	2.5	55642	3.1	4	178	2.5	48496	2.4	4
	407-24	185	2.0	136401	1.1	2	223	1.7	115456	5.1	4	228	1.7	90864	3.2	4	231	1.8	72183	2.1	4	234	1.8	63687	1.6	4
	408-24	264	2.6	194858	2.5	2	249	2.3	129304	1.1	2	236	2.1	94368	.6	2	264	2.6	82441	3.0	4	264	2.6	71854	2.3	4
	409-30	240	2.1	176924	1.4	2	240	2.1	124442	.7	2	320	1.5	127704	4.9	4	320	1.5	99805	3.1	4	320	1.5	86988	2.4	4
	410-30	320	2.5	235899	2.7	2	320	2.5	165923	1.4	2	320	2.5	127704	.8	2	427	1.7	133073	5.9	4	427	1.7	115984	4.5	4
	411-36	330	2.1	243429	1.5	2	364	.7	188761	5.8	4	377	.8	150409	3.8	4	397	.9	123650	2.6	4	409	.9	110991	2.1	4
	412-36	428	2.3	315336	2.7	2	428	2.4	221796	1.4	2	470	.8	187502	6.4	4	506	.9	157519	4.6	4	532	1.0	144375	3.9	4
50 TO 160	401-16	10	.1	9546	1.5	4	13	.1	8281	3.5	6	14	.2	6906	2.5	6	15	.2	5904	1.8	6	16	.2	5442	1.6	6
	402-16	23	.3	20822	3.3	4	23	.3	14846	1 7	4	30	5	14652	5.1	6	33	.6	12558	3.8	6	33	.6	11163	3.0	6
	403-18	51	.8	46109	5.0	4	55	.9	34971	2.9	4	55	.9	26958	1.8	4	74	1.6	28347	5.9	6	76	1.6	25346	4.8	6
	404-20	61	1.2	55504	1.2	2	69	.9	44104	5.1	4	93	2.6	45510	5.5	4	97	2.8	37184	3.7	4	97	2.8	32409	2.9	4
	405-20	86	.6	77463	5.1	4	107	1.5	67713	3.9	4	108	1.5	52911	2.4	4	118	1.1	44909	5.4	6	124	1.2	41240	4.6	6
	406-24	128	2.6	115532	1.9	2	122	2.3	77223	.9	2	150	1.8	73078	5.1	4	156	1.9	59675	3.5	4	166	2.2	55043	3.0	4
	407-24	129	.6	116194	5.1	4	173	1.7	109491	4.6	4	176	1.8	85666	2.9	4	186	1.2	70989	6.1	6	192	1.2	63719	5.0	6
	408-24	189	2.1	170130	1.9	2	180	1.9	114194	.9	2	235	2.1	114686	5.7	4	253	2.4	96330	4.1	4	264	2.6	87822	3.4	4
	409-30	210	1.6	189434	1.6	2	200	1.5	126684	.7	2	240	2.1	117062	4.1	4	240	2.1	91488	2.6	4	240	2.1	79739	2.0	4
	410-30	277	1.9	249815	3.0	2	272	1.9	172450	1.5	2	270	1.8	131763	.9	2	320	2.5	121984	5.0	4	320	2.5	106319	3.8	4
	411-36	278	1 5	250639	1.6	2	264	1.4	167400	.7	2	330	2.1	161065	4.3	4	330	2.1	125877	2.7	4	330	2.1	109712	2.1	4
	412-36	363	1.7	326580	2.9	2	355	1.6	224924	1.4	2	352	1.6	171792	.9	2	428	2.3	163061	4.9	4	428	2.3	142121	3.8	4
50 TO 180	401-16	7	.1	7595	3.0	6	7	.1	5766	1.8	6	8	.1	4863	1.3	6	9	.1	4210	1.0	6	10	.1	3912	.8	6
	402-16	13	.1	14582	1.7	4	17	.2	13277	4.2	6	18	.2	10811	2.8	6	23	.3	5111	6.1	8	25	.3	4669	5.4	8
	403-18	33	.3	35585	3.0	4	34	.3	25412	1.6	4	44	.6	25639	4.9	6	47	.6	21414	3.5	6	50	.7	19671	3.0	6
	404-20	41	.3	43643	5.0	4	58	1.0	43426	5.0	4	61	1.1	35391	3.4	4	64	1.2	28898	2.3	4	66	1.3	26196	1.9	4
	405-20	67	.6	72142	4.4	4	67	.6	50664	2.3	4	71	.4	41240	4.6	6	95	1.2	42887	5.0	6	100	1.3	39311	4.2	6
	406-24	80	1.0	85248	1.1	2	103	1.7	76971	5.6	4	128	2.5	73915	5.2	4	128	2.5	57767	3.3	4	128	2.5	50349	2.5	4
	407-24	109	.7	116194	5.1	4	108	.7	81132	2.7	4	112	.8	64801	1.7	4	155	1.4	69999	5.9	6	159	1.5	62438	4.8	6
	408-24	118	.8	126195	1.1	2	154	1.4	115456	5.7	4	188	2.0	108544	5.1	4	200	2.3	89913	3.6	4	204	2.4	80276	2.9	4
	409-30	131	.7	139745	.9	2	186	1.3	139280	5.8	4	208	1.6	119790	4.3	4	224	1.8	100781	3.1	4	229	1.9	89925	2.5	4
	410-30	172	.8	183561	1.7	2	172	.8	128916	.9	2	240	1.4	138351	6.3	4	290	2.0	130466	5.7	4	304	2.2	119163	4.8	4
	411-36	173	.6	183916	.9	2	252	1.2	188761	5.8	4	275	1.5	158339	4.2	4	289	1.6	130005	2.9	4	306	1.8	120247	2.5	4
	412-36	224	.7	238546	1.6	2	223	.7	167307	.8	2	325	1.4	187502	6.4	4	383	1.9	172204	5.4	4	399	2.0	156565	4.5	4

Conversion of H.T.W. in #/hr. to G.P.M. at specific temperature

$$\text{G.P.M.} = \frac{\#/\text{hr.}}{\text{Conversion Factor}}$$

400° = 453
380° = 456
350° = 460
325° = 463
300° = 466

COMPACT 400 CAPACITIES IN G.P.M. — H.T.W. CAPACITIES IN LBS. PER HOUR PRESSURE DROP IN P.S.I.

60° F INLET WATER

TEMP. RANGE	RECOVERY SECTION SIZE	HIGH TEMPERATURE WATER																									
		300 TO 240					325 TO 240					350 TO 240					380 TO 240					400 TO 240				
		DOMESTIC WATER		H.T.W. WATER		TUBE PASS	DOMESTIC WATER		H.T.W. WATER		TUBE PASS	DOMESTIC WATER		H.T.W. WATER		TUBE PASS	DOMESTIC WATER		H.T.W. WATER		TUBE PASS	DOMESTIC WATER		H.T.W. WATER		TUBE PASS
		GPM	PD	#/HR.	PD		GPM	PD	#/HR.	PD		GPM	PD	#/HR.	PD		GPM	PD	#/HR.	PD		GPM	PD	#/HR.	PD	
60 TO 120	401-16	30	.8	14782	.6	2	45	1.7	15674	4.0	4	45	1.7	12143	2.4	4	46	1.8	9615	1.5	4	48	1.9	8690	1.3	4
	402-16	55	1.7	27303	.9	2	70	1.5	24210	4.4	4	70	1.5	18763	2.7	4	71	1.5	14862	1.7	4	74	1.6	13424	1.4	4
	403-18	100	1.4	49059	.9	2	125	2.2	43084	4.4	4	124	2.2	33160	2.7	4	124	2.2	25916	1.7	4	124	2.2	22588	1.3	4
	404-20	130	3.0	63918	1.6	2	130	3.0	44958	.8	2	130	3.0	34602	.5	2	130	3.0	27043	.3	2	130	3.0	23570	.2	2
	405-20	156	1.9	76717	.8	2	156	1.9	53960	.4	2	156	1.9	41531	.2	2	156	1.9	32458	.1	2	156	1.9	28290	.1	2
	406-24	178	2.5	87676	1.1	2	178	2.5	61668	6	2	178	2.5	47464	.3	2	178	2.5	37094	.2	2	178	2.5	32331	.1	2
	407-24	245	2.0	120162	.9	2	245	2.0	84518	.4	2	245	2.0	65050	.2	2	245	2.0	50839	.1	2	245	2.0	44310	.1	2
	408-24	264	2.6	129905	1.1	2	264	2.6	91371	.6	2	264	2.6	70324	.3	2	264	2.6	54961	.2	2	264	2.6	47903	.2	2
	409-30	320	1.5	157266	1.1	2	320	1.5	110615	.6	2	320	1.5	85136	.3	2	320	1.5	66537	.2	2	320	1.5	57992	.2	2
	410-30	427	1.7	209688	2.2	2	427	1.7	147487	1.1	2	427	1.7	113515	.7	2	427	1.7	88715	.4	2	427	1.7	77323	.3	2
	411-36	496	1.4	243429	1.5	2	496	1.4	171219	.7	2	496	1.4	131780	.5	2	496	1.4	102991	.3	2	496	1.4	89765	.2	2
	412-36	661	1.6	324572	2.8	2	661	1.6	228292	1.4	2	661	1.6	175707	.9	2	661	1.6	137321	.5	2	661	1.6	119686	.4	2
60 TO 140	401-16	23	.5	15065	3.7	4	23	.5	10738	1.9	2	30	.8	10718	5.8	6	32	.9	8883	4.0	6	32	.9	7900	3.2	6
	402-16	35	.4	23199	4.0	4	47	1.2	21854	3.6	2	48	1.2	17032	2.2	4	49	.7	13662	4.4	6	55	1.6	13424	4.3	6
	403-18	70	.7	46109	5.0	4	86	2.1	39962	3.8	2	86	2.1	30757	2.3	4	104	1.6	28890	6.2	6	108	1.7	26067	5.1	6
	404-20	98	1.7	64351	1.7	2	97	2.8	44958	.8	2	128	2.9	45510	5.5	4	130	3.0	36057	3.5	4	130	3.0	31427	2.7	4
	405-20	122	1.9	80370	.9	2	156	1.9	71947	4.4	2	156	1.9	55374	2.7	4	156	1.9	43277	1.7	4	156	1.9	37719	1.3	4
	406-24	178	2.5	116902	2.0	2	178	2.5	82225	1.0	2	173	2.4	61398	.6	2	170	2.3	49459	.3	2	178	2.5	43108	1.9	4
	407-24	185	2.0	121245	.9	2	245	2.0	112690	4.9	2	245	2.0	86733	3.0	4	245	2.0	67785	1.8	4	245	2.0	59080	1.4	4
	408-24	264	2.6	173207	2.0	2	264	2.6	121828	1.0	2	264	2.6	93766	.6	2	264	2.6	73281	.4	2	264	2.6	63870	.3	2
	409-30	274	1.1	179219	1.5	2	261	1.0	120175	.7	2	320	1.4	113515	3.9	4	320	1.4	88715	2.5	4	320	1.4	77323	1.9	4
	410-30	358	1.2	234682	2.7	2	351	1.2	161720	1.3	2	349	1.2	123742	.8	2	427	1.7	118287	4.7	4	427	1.7	103097	3.6	4
	411-36	330	2.1	216381	1.2	2	410	.9	188761	5.8	4	464	1.2	164327	4.5	4	477	1.2	132216	3.0	4	496	1.3	119686	2.5	4
	412-36	428	2.3	280299	2.1	2	428	2.3	197152	1.1	2	529	1.0	187502	6.4	4	625	1.4	173137	5.5	4	642	1.5	154825	4.5	4
60 TO 160	401-16	12	.1	10335	1.8	4	16	.2	9226	4.3	6	16	.2	7471	2.9	6	18	.3	6368	2.1	6	19	.3	5860	1.8	6
	402-16	27	.4	22053	3.7	4	27	.4	15764	1.9	4	35	.7	15898	5.9	6	38	.8	13255	4.2	6	39	.8	11835	3.4	6
	403-18	56	.9	46109	5.0	4	63	1.1	36496	3.2	4	65	1.2	28889	2.0	4	86	2.1	30047	6.6	6	86	2.1	26189	5.1	6
	404-20	70	1.5	57414	1.3	2	79	1.1	45816	5.5	4	97	2.8	43253	5.0	4	97	2.8	33803	3.1	4	97	2.8	29462	2.4	4
	405-20	94	.7	77463	5.1	4	122	1.9	70662	4.3	4	122	1.9	54386	2.6	4	138	1.5	47905	6.1	6	145	1.7	43875	5.2	6
	406-24	128	2.5	105029	1.6	2	128	2.5	73874	.8	2	172	2.3	76457	5.6	4	178	2.5	61824	3.7	4	178	2.5	53885	2.9	4
	407-24	142	.7	116194	5.2	4	185	2.0	106599	4.4	4	185	2.0	82045	2.7	4	212	1.5	73431	6.5	6	226	1.7	68280	5.7	6
	408-24	211	2.5	173207	2.0	2	203	2.3	117010	1.0	2	259	2.4	114686	5.7	4	264	2.5	91601	3.7	4	264	2.5	79838	2.9	4
	409-30	240	2.1	196582	1.7	2	231	.8	133262	5.3	4	244	.9	108351	3.6	4	257	.9	89182	2.5	4	266	1.0	80269	2.0	4
	410-30	320	2.5	262110	3.3	2	309	2.3	177760	1.6	2	312	.9	138351	6.3	4	331	1.0	114499	4.4	4	347	1.1	104848	3.8	4
	411-36	316	1.9	258593	1.7	2	293	1.7	168693	.7	2	330	2.1	146423	3.6	4	330	2.1	114434	2.3	4	364	.7	109984	6.4	6
	412-36	414	2.2	338690	3.1	2	406	2.1	233556	1.5	2	403	2.0	178375	.9	2	428	2.3	148237	4.1	4	428	2.3	129201	3.2	4
60 TO 180	401-16	8	.1	8148	3.4	6	9	.1	6362	2.1	6	9	.1	5208	1.5	6	10	.1	4498	1.1	6	11	.1	4173	1.0	6
	402-16	15	.1	15363	1.8	4	20	.2	13938	4.6	6	21	.2	11389	3.1	6	26	.4	5416	6.7	8	28	.4	4939	5.9	8
	403-18	37	.4	36927	3.3	4	38	.4	26389	1.7	4	50	.7	26608	5.3	6	55	.8	22856	4.0	6	56	.9	20424	3.2	6
	404-20	47	.4	46109	5.6	4	64	1.2	44468	5.2	4	68	1.4	36475	3.6	4	73	1.6	30539	2.6	4	76	1.7	27577	2.1	4
	405-20	75	.7	73775	4.6	4	75	.7	52244	2.4	4	80	.5	42887	5.0	6	106	1.4	44141	5.3	6	113	1.6	41139	4.6	6
	406-24	88	1.2	86575	1.1	2	111	1.9	76971	5.6	4	128	2.5	68229	4.5	4	128	2.5	53323	2.8	4	128	2.5	46476	2.2	4
	407-24	118	.8	116194	5.1	4	124	.9	85970	2.9	4	124	.9	66346	1.8	4	172	1.7	71449	6.2	6	178	1.8	64426	5.1	6
	408-24	131	1.0	128495	1.1	2	167	1.0	115456	5.7	4	211	2.5	112519	5.5	4	211	2.5	87937	3.4	4	211	2.5	76645	2.6	4
	409-30	145	.8	142318	.9	2	201	1.5	139280	5.8	4	231	1.9	123135	4.6	4	240	2.0	99805	3.1	4	240	2.0	86988	2.4	4
	410-30	192	.9	188861	1.8	2	190	.9	131638	.9	2	260	1.7	138351	6.3	4	320	2.8	133073	5.9	4	320	2.5	115984	4.5	4
	411-36	190	.7	187287	.9	2	273	1.4	188761	5.8	4	310	1.8	164673	4.5	4	320	1.9	133080	3.0	4	330	2.1	119686	2.5	4
	412-36	250	.8	245587	1.7	2	247	.8	170938	.8	2	353	1.6	187502	6.4	4	428	2.3	177885	5.8	4	428	2.3	155041	4 5	4

Conversion of H.T.W. in #/hr. to G.P.M. at specific temperature	G.P.M. = $\frac{\#/hr.}{\text{Conversion Factor}}$	400° = 453 380° = 456 350° = 460	325° = 463 300° = 466

COMPACT 400 CAPACITIES IN G.P.M. — H.T.W. CAPACITIES IN LBS. PER HOUR PRESSURE DROP IN P.S.I.

70° F INLET WATER

TEMP. RANGE	RECOVERY SECTION SIZE	HIGH TEMPERATURE WATER																										
		300 TO 240					325 TO 240					350 TO 240					380 TO 240					400 TO 240				
		DOMESTIC WATER		H.T.W. WATER		TUBE PASS	DOMESTIC WATER		H.T.W. WATER		TUBE PASS	DOMESTIC WATER		H.T.W. WATER		TUBE PASS	DOMESTIC WATER		H.T.W. WATER		TUBE PASS	DOMESTIC WATER		H.T.W. WATER		TUBE PASS
		GPM	PD	#/HR.	PD		GPM	PD	#/HR.	PD		GPM	PD	#/HR.	PD		GPM	PD	#/HR.	PD		GPM	PD	#/HR.	PD	
70 TO 120	401-16	40	1.4	16666	.7	2	48	1.9	13813	3.1	4	48	1.9	10632	1.9	4	48	1.9	8309	1.2	4	48	1.9	7242	.9	4
	402-16	63	1.2	25785	.8	2	74	1.6	21338	3.4	4	74	1.6	16423	2.1	4	74	1.6	12835	3.1	4	74	1.6	11187	1.0	4
	403-18	124	2.2	51046	1.0	2	124	2.2	35904	3.1	4	124	2.2	27634	1.9	4	124	2.2	21597	1.2	4	124	2.2	18823	.9	4
	404-20	130	3.0	53265	1.2	2	130	3.0	37465	.6	2	130	3.0	28835	.3	2	130	3.0	22536	.2	2	130	3.0	19642	.1	2
	405-20	156	1.9	63931	.5	2	156	1.9	44967	.3	2	156	1.9	34609	.2	2	156	1.9	27048	.1	2	156	1.9	23575	.1	2
	406-24	178	2.5	73064	.8	2	178	2.5	51390	.4	2	178	2.5	39553	.2	2	178	2.5	30912	.1	2	178	2.5	26942	.1	2
	407-24	245	2.0	100135	.6	2	245	2.0	70432	.3	2	245	2.0	54208	.2	2	245	2.0	42366	.1	2	245	2.0	36925	.1	2
	408-24	264	2.6	108254	.8	2	264	2.6	76142	.4	2	264	2.6	58604	.2	2	264	2.6	45801	.1	2	264	2.6	39919	.1	2
	409-30	320	1.5	131055	.8	2	320	1.5	92179	.4	2	320	1.5	70947	.2	2	320	1.5	55447	.1	2	320	1.5	48327	.1	2
	410-30	427	1.7	174740	1.5	2	427	1.7	122906	.8	2	427	1.7	94596	.5	2	427	1.7	73930	.3	2	427	1.7	64436	.2	2
	411-36	496	1.3	202857	1.0	2	496	1.3	142682	.5	2	496	1.3	109817	.3	2	496	1.3	85826	.2	2	496	1.3	74804	.1	2
	412-36	661	1.6	270476	2.0	2	661	1.6	190243	1.1	2	661	1.6	146423	.6	2	661	1.6	114434	.4	2	661	1.6	99739	.3	2
70 TO 140	401-16	29	.7	16770	4.5	4	29	.7	11807	2.3	4	30	.8	9303	1.5	4	39	1.3	9665	4.8	6	41	1.4	8737	9.3	6
	402-16	45	.6	25821	5.0	4	55	1.6	22405	3.8	4	55	1.6	17244	2.3	4	61	1.1	14842	5.2	6	64	1.2	13495	4.4	6
	403-18	83	1.9	47909	.9	2	97	1.3	39146	3.6	4	99	1.4	30872	2.3	4	102	1.5	24691	1.5	4	124	2.2	26352	5.2	6
	404-20	120	2.6	69043	1.9	2	111	2.2	44756	.8	2	130	3.0	40369	4.4		130	3.0	31550	2.7	4	130	3.0	27498	2.1	4
	405-20	136	1.5	77896	.8	2	156	1.9	62953	3.4	4	156	1.9	48453	2.1	4	156	1.9	37867	1.3	4	156	1.9	33004	1.0	4
	406-24	178	2.5	102289	1.5	2	178	2.5	71947	.8	2	178	2.5	55374	.4		178	2.5	43277	.3	2	178	2.5	37719	.2	2
	407-24	212	1.5	121631	.9	2	245	2.0	98604	3.8	4	245	2.0	75892	2.3	4	245	2.0	59312	1.4	4	245	2.0	51695	1.1	4
	408-24	264	2.6	151556	1.5	2	264	2.6	106599	.8	2	264	2.6	82045	.5	2	264	2.6	64121	.3	2	264	2.6	55887	.2	2
	409-30	320	1.4	183477	1.5	2	320	1.4	129051	.8	2	304	1.3	99325	.4	2	320	1.4	77626	1.9	4	320	1.4	67657	1.5	4
	410-30	427	1.7	244636	2.9	2	427	1.7	172068	1.5	2	427	1.7	132434	.9	2	427	1.7	103501	.6	2	427	1.7	90210	.4	2
	411-36	384	.8	219907	1.2	2	469	1.2	188761	5.8	4	496	1.3	153744	4.0	4	496	1.3	120156	2.5	4	496	1.3	104725	1.9	4
	412-36	506	.9	289718	2.3	2	480	.9	193458	1.0	2	477	.8	147785	.6	2	661	1.6	160208	4.8	4	661	1.6	139634	3.7	4
70 TO 160	401-16	15	.2	11211	2.1	4	19	.3	9939	5.0	6	20	.3	8094	3.4	6	22	.4	6877	2.5	6	23	.4	6317	2.1	6
	402-16	32	.6	24026	4.3	4	32	.6	16745	2.2	4	42	1.0	16990	6.7	6	45	1.1	13998	4.7	6	46	1.1	12706	3.9	6
	403-18	62	1.1	46109	5.0	4	73	1.5	37997	3.4	4	74	1.5	29657	2.1	4	76	1.6	23723	1.4	4	86	2.0	23570	4.2	6
	404-20	82	2.0	60408	1.5	2	88	1.4	45816	5.5	4	99	1.8	39797	4.2	4	106	2.0	33077	3.0	4	109	2.1	29734	2.4	4
	405-20	105	.9	77463	5.1	4	122	1.9	63596	3.5	4	122	1.9	48947	2.1	4	156	1.9	48687	6.3	6	156	1.9	42434	4.9	6
	406-24	129	1.3	95496	1.3	2	128	2.5	66486	.6	2	178	2.5	71196	4.9	4	178	2.5	55642	3.1	4	178	2.5	48496	2.4	4
	407-24	157	.8	116194	5.2	4	185	2.0	95439	3.6	4	190	1.2	75716	2.3	4	195	1.3	60893	1.5	4	245	1.9	66465	5.4	6
	408-24	212	1.7	156386	1.6	2	211	2.5	109645	.8	2	264	2.5	105487	4.8	4	264	2.5	82441	3.0	4	264	2.5	71854	2.3	4
	409-30	240	2.1	176924	1.4	2	269	1.0	139280	5.8	4	283	1.1	112976	3.9	4	303	1.3	94336	2.8	4	309	1.3	84034	2.2	4
	410-30	320	2.5	235899	2.7	2	320	2.5	165923	1.4	2	347	1.1	138351	6.3	4	397	1.5	123776	5.1	4	409	1.5	110982	4.2	4
	411-36	330	2.1	243429	1.5	2	330	2.1	171219	.7	2	319	1.9	131780	.4	2	333	.6	103951	1.9	4	437	1.0	118627	7.4	6
	412-36	428	2.3	315336	2.7	2	428	2.3	221796	1.4	2	428	2.3	170708	.8	2	445	.7	138766	3.6	4	455	.7	123489	2.9	4
70 TO 180	401-16	9	.1	8749	3.9	6	10	.1	6810	2.4	6	11	.1	5746	1.8	6	12	.1	4807	1.3	6	13	.1	4453	1.1	6
	402-16	18	.2	16181	2.0	4	23	.3	14632	5.0	6	24	.3	11991	3.5	6	26	.4	5737	2.6	6	33	.6	5225	6.5	8
	403-18	42	.5	38296	3.5	4	43	.5	27376	1.8	4	58	.9	28295	5.9	6	62	1.1	23649	4.2	6	65	1.2	21711	3.6	6
	404-20	51	.5	46109	5.6	4	72	1.5	45816	5.5	4	77	1.7	37550	3.8	4	81	1.9	31057	2.6	4	85	1.3	28279	6.7	6
	405-20	86	1.0	77463	5.1	4	85	.9	53806	2.5	4	91	.7	44568	5.3	6	122	1.9	46755	5.9	6	122	1.9	40750	4.5	6
	406-24	100	1.6	90093	1.2	2	121	2.3	76971	5.6	4	128	2.5	62543	3.8	4	132	1.4	50491	2.5	4	137	1.5	45617	2.1	4
	407-24	129	1.0	116194	5.1	4	139	1.1	88168	3.0	4	145	.7	70770	6.1	6	185	1.9	70533	6.0	6	185	1.9	61475	4.7	6
	408-24	145	1.2	130541	1.1	2	182	1.2	115456	5.7	4	211	2.5	103142	4.6	4	211	2.5	80609	2.9	4	218	1.7	72451	2.4	4
	409-30	160	1.0	144602	1.0	2	220	1.7	139280	5.8	4	240	2.0	117062	4.1	4	240	2.0	91488	2.6	4	240	2.0	79739	2.0	4
	410-30	215	1.2	194042	1.9	2	212	1.1	134125	.9	2	284	1.9	138351	6.3	4	320	2.4	121984	5.0	4	320	2.4	106319	3.9	4
	411-36	211	1.0	190272	.9	2	298	1.7	188761	5.8	4	330	2.0	161065	4.3	4	330	2.0	125877	2.7	4	330	2.0	109712	2.1	4
	412-36	280	1.0	252486	1.7	2	275	1.0	174264	.9	2	385	1.9	187502	6.4	4	428	2.3	163061	4.9	4	428	2.3	142121	3.8	4

Conversion of H.T.W. in #/hr. to G.P.M. at specific temperature

$$G.P.M. = \frac{\#/hr.}{\text{Conversion Factor}}$$

400° = 453
380° = 456
350° = 460
325° = 463
300° = 466

BOOSTER HEATER TABLES

BOILER WATER

COMPACT 400 CAPACITIES IN G.P.M.—PRESSURE DROP P.S.I.

140° F to 180° F

BOILER WATER 20° F DROP

TEMP. RANGE	RECOVERY SECTION SIZE	BOILER WATER																										
		°200 TO 180°					210° TO 190°					220° TO 200°					230° TO 210°					240° TO 220°				
		DOMESTIC WATER		BOILER WATER		TUBE PASS	DOMESTIC WATER		BOILER WATER		TUBE PASS	DOMESTIC WATER		BOILER WATER		TUBE PASS	DOMESTIC WATER		BOILER WATER		TUBE PASS	DOMESTIC WATER		BOILER WATER		TUBE PASS
		GPM	PD	GPM	PD		GPM	PD	GPM	PD		GPM	PD	GPM	PD		GPM	PD	GPM	PD		GPM	PD	GPM	PD	
140° — 180°	401-16						5	.03	10	1.37	6	10	.10	20	1.45	4	16	.3	32	3.46	4	20	. 36	40	.87	2
	402-16	4	.01	8	.82	8	13	.11	27	3.73	6	23	.32	47	3.53	4	25	.36	50	.64	2	47	1.16	95	2.13	2
	403-18	10	.04	21	1.86	8	24	.19	49	1.27	4	42	.52	84	3.55	4	62	1.08	125	1.20	2	84	1.90	169	2.14	2
	404-20	16	.10	33	2.18	6	42	.56	84	4.05	4	60	1.07	120	1.24	2	84	1.29	169	2.38	2	84	1.29	169	2.36	2
	405-20	23	.09	47	3.10	8	53	.39	106	2.11	4	71	.42	142	3.62	4	122	1.83	245	1.64	2	142	1.53	285	2.17	2
	406-24	25	.06	51	1.87	6	71	.42	142	4.12	4	94	.71	188	1.10	2	142	1.57	285	2.42	2	142	1.57	285	2.40	2
	407-24	40	.29	81	4.35	6	86	.46	173	2.49	4	107	.40	214	3.68	4	185	1.89	370	1.68	2	214	1.46	428	2.20	2
	408-24	58	.22	117	4.14	6	107	.45	214	4.18	4	203	2.25	407	2.24	2	214	1.65	428	2.44	2	214	1.65	428	2.43	2
	409-30	64	.17	129	3.50	6	129	.62	258	4.21	4	217	1.64	434	1.78	2	249	.86	499	2.31	2	258	.91	516	2.44	2
	410-30	68	.13	136	4.34	6	124	.40	248	4.36	4	258	1.59	516	2.71	2	258	.63	516	2.69	2	258	.63	516	2.67	2
	411-36	84	.16	169	3.35	6	174	.61	349	4.26	4	287	1.53	574	1.72	2	300	1.99	661	2.23	2	349	.66	699	2.46	2
	412-36	91	.12	183	4.34	6	167	.38	334	4.36	4	349	1.52	699	2.73	2	349	.46	699	2.71	2	349	.46	699	2.69	2

140° F to 180° F

BOILER WATER 40° F DROP

TEMP. RANGE	RECOVERY SECTION SIZE	BOILER WATER														
		220° TO 180°					230° TO 190°					240° TO 200°				
		DOMESTIC WATER		BOILER WATER		TUBE PASS	DOMESTIC WATER		BOILER WATER		TUBE PASS	DOMESTIC WATER		BOILER WATER		TUBE PASS
		GPM	PD	GPM	PD		GPM	PD	GPM	PD		GPM	PD	GPM	PD	
140° — 180°	401-16						6	.04	6	.53	6	14	.19	14	2.32	6
	402-16	6	.03	6	.60	8	19	.22	19	4.37	8	29	.49	29	4.37	6
	403-18	17	.10	17	1.19	8	39	.45	39	2.48	6	54	.84	54	1.54	4
	404-20	32	.33	32	4.33	8	50	.79	50	1.53	4	84	2.07	84	3.99	4
	405-20	38	.21	38	2.01	8	84	.92	84	4.06	6	116	1.66	116	2.46	4
	406-24	53	.25	53	4.35	8	84	.92	84	4.06	6	142	1.57	142	4.06	4
	407-24	61	.61	61	2.54	6	115	1.99	115	2.74	4	185	1.89	185	2.78	4
	408-24	89	.48	89	2.45	6	169	1.59	169	2.67	4	214	1.65	214	4.12	4
	409-30	96	.36	96	2.02	6	182	1.19	182	2.19	4	240	1.98	240	3.62	4
	410-30	136	.48	136	4.32	6	249	1.49	249	4.35	4	250	.60	250	4.35	4
	411-36	126	.33	126	1.90	6	232	1.03	232	1.96	4	330	1.99	330	3.78	4
	412-36	175	.42	175	3.97	6	336	1.41	336	4.36	4	337	1.42	337	4.36	4

COMPACT SERIES 400
BOILER WATER TO WATER

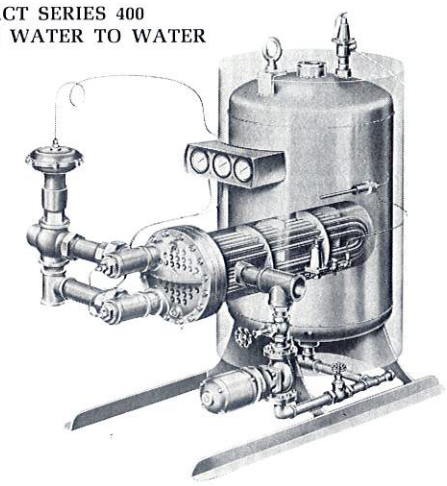

HIGH TEMPERATURE WATER

H.T.W. CAPACITIES IN LBS. PER HOUR—PRESSURE DROP IN P.S.I.

140° F to 180° F

TEMP. RANGE	RECOVERY SECTION SIZE	HIGH TEMPERATURE																										
		300° TO 240°					325° TO 240°					350° TO 240°					380° TO 240°					400° TO 240°				
		DOMESTIC WATER		H.T.W. WATER		TUBE PASS	DOMESTIC WATER		H.T.W. WATER		TUBE PASS	DOMESTIC WATER		H.T.W. WATER		TUBE PASS	DOMESTIC WATER		H.T.W. WATER		TUBE PASS	DOMESTIC WATER		H.T.W. WATER		TUBE PASS
		GPM	PD	#/HR.	PD		GPM	PD	#/HR.	PD		GPM	PD	#/HR.	PD		GPM	PD	#/HR.	PD		GPM	PD	#/HR.	PD	
140° — 180°	401-16	40	1.2	13170	2.8	4	40	1.3	9312	1.4	4	48	1.7	8505	3.7	6	48	1.7	6647	2.3	6	48	1.7	5794	1.8	6
	402-16	62	1.1	20308	3.1	4	62	1.1	14371	1.6	4	74	1.5	13138	4.1	6	74	1.5	10268	2.6	6	74	1.5	8949	2.0	6
	403-18	124	2.1	40837	3.9	4	124	2.1	28723	2.0	4	124	2.1	22107	1.2	4	124	2.1	17277	.79	4	124	2.1	15059	.61	4
	404-20	130	2.9	42612	.78	2	130	2.9	29972	2.5	4	130	2.9	23068	1.5	4	130	2.9	18028	.97	4	130	2.9	15713	.75	4
	405-20	156	1.8	51145	2.3	4	156	1.8	35973	1.2	4	156	1.8	27687	.74	4	156	1.8	21638	.46	4	156	1.8	18860	.36	4
	406-24	178	2.4	58451	.54	2	178	2.4	41112	.28	2	178	2.4	31642	.17	2	178	2.4	24730	.11	2	178	2.4	21554	.08	2
	407-24	245	1.8	80108	2.57	4	245	1.8	56345	1.3	4	245	1.8	43367	.81	4	245	1.8	33893	.51	4	245	1.8	29540	.40	4
	408-24	264	2.4	86604	.54	2	264	2.4	60914	.28	2	264	2.4	46883	.17	2	264	2.4	36641	.11	2	264	2.4	31935	.08	2
	409-30	320	1.3	104844	.54	2	320	1.3	73743	.28	2	320	1.3	56757	.17	2	320	1.3	44358	.11	2	310	1.2	38661	.08	2
	410-30	427	1.6	139792	1.0	2	427	1.6	98324	.53	2	427	1.6	75676	.32	2	427	1.6	59144	.20	2	427	1.6	51548	.16	2
	411-36	496	1.2	162286	4.4	4	496	1.2	114146	2.2	4	496	1.2	87853	1.4	4	496	1.2	68660	.88	4	496	1.2	59843	.68	4
	412-36	631	1.3	206553	1.2	2	661	1.5	152195	4.3	4	661	1.5	117138	2.6	4	661	1.5	91547	1.6	4	661	1.5	79791	1.3	4

BOILER WATER AND H.T.W. WATER

COMPACT 400® DIMENSION DATA

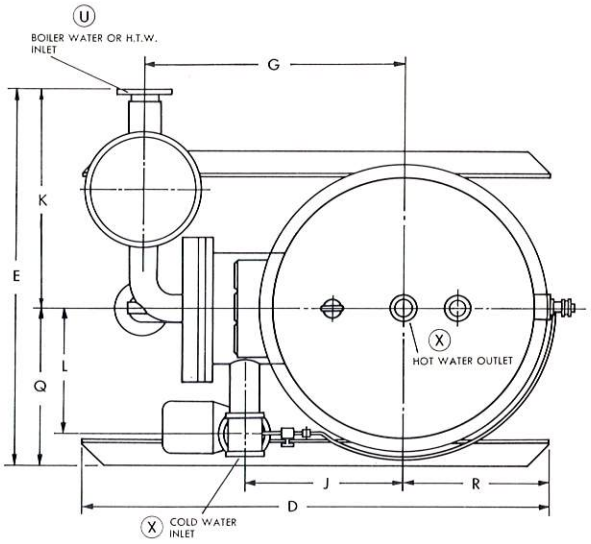

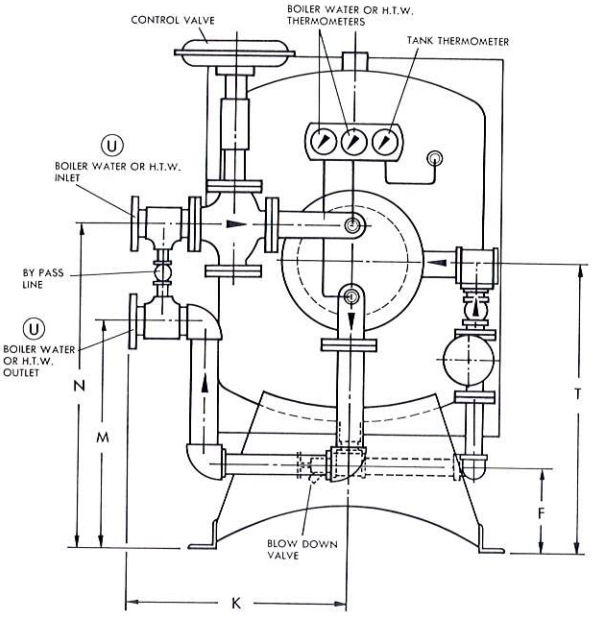

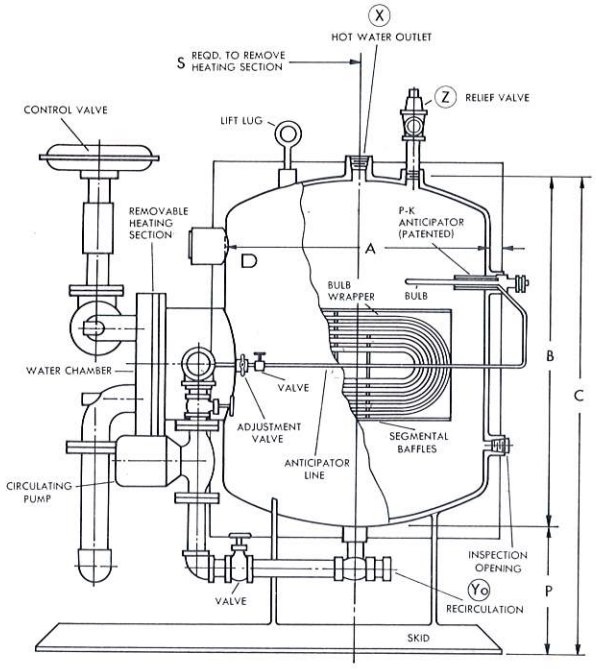

DIMENSION TABLE II. **ROUGHING IN DIMENSIONS ONLY** **DIMENSIONS IN INCHES**

UNIT SIZE	A DIA.	B	C	D	E*	F	G*	J	K*	L	M	N	P	Q	R	S	T	U**	Yo	X WATER	Y BLOW DOWN	Z RELIEF VALVE
401-16	16	33	51	39	28¼	8	26	14½	18¼	12½	20¼	27¾	16	10	10	38	26	1½	1¼	3	¾	¾
402-16	16	33	51	39	28¼	8	26	14½	18¼	12½	20¼	27¾	16	10	10	44	26	1½	1¼	3	¾	¾
403-18	18	34	52	41	36	8	28½	14¼	25	13½	22	31⅛	16	11	11	45	29	2½	1¼	3	¾	1
404-20	20	35	53	45	40	8	30	14⅛	28	14½	21½	31⅞	16	12	12	42	29	3	1½	3	¾	1¼
405-20	20	35	53	45	40	8	30	14⅛	28	14½	21½	31⅞	16	12	12	47	29	3	1½	3	¾	1¼
406-24	24	39	57	52	42	8	35¾	19	28	14½	22½	35⅞	16	14	14	47	32	3	1½	4	¾	1¼
407-24	24	39	57	52	42	8	35¾	19	28	14½	22½	35⅞	16	14	14	53	32	3	1½	5†	¾	2
408-24	24	39	57	52	42	8	35¾	19	28	14½	22½	35⅞	16	14	14	60	32	3	1½	5†	¾	2
409-30	30	40	58	59	51¾	8	40¾	21⅝	34¾	15½	22	38½	16	17	17	63	33½	4	1½	6†	¾	2
410-30	30	40	58	59	51¾	8	40¾	21⅝	34¾	15½	22	38½	16	17	17	70	33½	4	1½	6†	¾	2
411-36	36	48	66	64	59½	8	54	23½	39½	17¼	27	45½	16	20	20	66	40	5	1½	8†	¾	2
412-36	36	48	66	64	59½	8	54	23½	39½	17¼	27	45½	16	20	20	72	40	5	1½	8†	¾	2

*VARIES IF OTHER THAN STANDARD VALVE IS USED. **"U" DIMENSION VARIES WITH SIZE OF STEAM CONTROL VALVE.
†CONNECTIONS SHOWN ARE MAXIMUM. CONNECTIONS OVER 3" I.P.S. ARE 150 lb. FLANGED.

COMPACT 400®
BOILER WATER AND H.T.W. PIPING ARRANGEMENTS

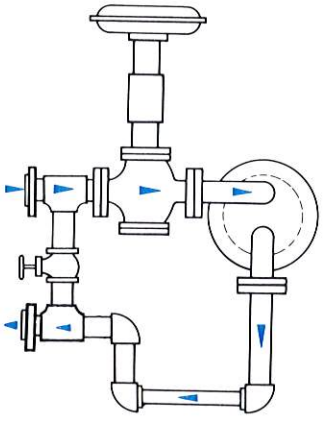

FIGURE 1.
Two-way valve on inlet side with by-pass

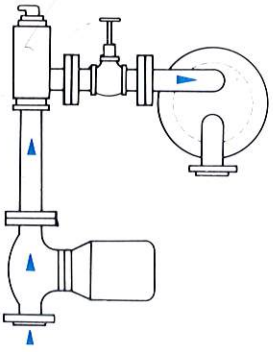

FIGURE 2.
Boiler water pump on inlet side with thermostatic control

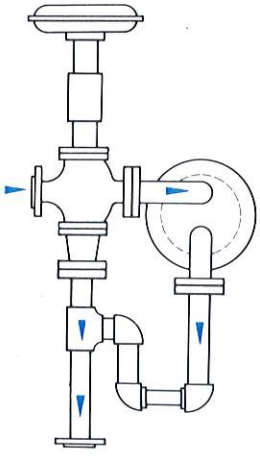

FIGURE 3.
Three-way diverting valve on inlet side

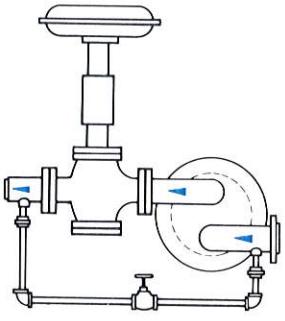

FIGURE 4.
Two-way valve on outlet side with minimum by-pass recommended for H.T.W.

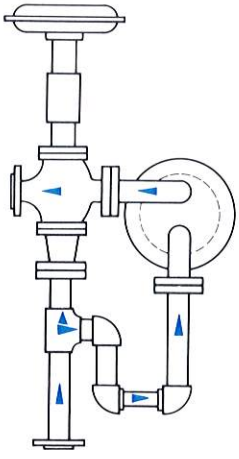

FIGURE 5.
Three-way mixing valve on outlet side recommended for H.T.W.

GUIDE SPECIFICATION
STEAM TO WATER

Furnish and install where shown on the plans_____Compact Series 400 Water Heater (s), Model Number_____.

Each heater shall be a factory assembled package rated to heat_____G.P.M. of water from_____°F. to_____°F. and control the outlet within 5°F. of the selected temperature, when supplied with_____p.s.i.g. saturated steam before the control valve. The domestic water pressure drop through the heater shall not exceed_____ p.s.i.g.

Each heater shall be constructed and stamped in accordance with Section VIII of the ASME Code for a working pressure of 150 p.s.i.g. Inspection form U-1 shall be furnished.

Each heater shall be furnished with an external ANTICIPATOR control assembly designed to constantly vary the steam flow to the heat exchanger in proportion to the variation in flow and temperature of the cold water. Under conditions of no or low flow of cold water, the ANTICIPATOR shall monitor the temperature of the stored water.

Each heater shall be capable of being disassembled and the heat exchanger section removed for inspection and service without breaking water connections. The bolting between the steam bonnet, tube sheet and shell flange shall be independent of each gasket to allow inspection and replacement of either gasket without disturbing the other gasket. Each heater shall have easy access to the individual tubes without moving the heater from its installed position. No overhead clearance shall be required for servicing.

Each packaged heater shall consist of the following components completely factory assembled so that the contractor need only connect to services.

(1) Compact 400 water heater with copper silicon shell, copper tubes, copper heat exchanger wrapper and baffles, non-ferrous tube sheet, cast iron steam chamber, steel vertical support skids and lifting lug.

(2) Steam strainer.

(3) Temperature control valve (_____pilot operated or_____air operated).

(4) Condensate strainer.

(5) Main steam trap.

(6) Auxiliary steam trap.

(7) Water thermometer and steam pressure gauge in a console mounting. Thermometer installed with separable thermowell.

(8) P-K ANTICIPATOR control system.

(9) ASME pressure relief valve for domestic water.

(10) Insulation-Steel Jacketed—1½″ thick fiberglas.

(11) Bronze circulator—1/12 h.p.—115 volt/60 cycle/single phase, wired for continuous operation.

(12) Component piping.

(13) Installation and operating instructions.

Each heater shall be as manufactured by The Patterson-Kelley Co., Inc. The manufacturer shall assume the operational responsibility for all components of the package.

GUIDE SPECIFICATION

BOILER WATER TO WATER

Furnish and install where shown on the plans_____Compact Series 400 Water Heater(s), Model Number_____.

Each heater shall be a factory assembled package rated to heat_____G.P.M. of water_____°F. to_____°F. and control the outlet within 5°F. of the selected temperature when supplied with_____G.P.M. boiler water entering at_____°F. and leaving at_____°F.

The domestic water pressure drop through the heater shall not exceed_____ p.s.i.g. The boiler water pressure drop through the tubes of the heater shall not exceed_____p.s.i.g. Control valve pressure drop not to exceed 5 p.s.i.g.

Each heater shall be constructed and stamped in accordance with Section VIII of the ASME Code for a working pressure of 150 p.s.i.g. shell side, 150 p.s.i.g. tube side. Inspection Form U-1 shall be furnished.

Each heater shall be furnished with an external ANTICIPATOR control system designed to constantly vary the boiler water to the heat exchanger in proportion to the variation in flow and temperature of the cold water. Under conditions of no or low flow of cold water, the ANTICIPATOR shall monitor the temperature of the stored water.

Each heater shall be capable of being disassembled and the heat exchanger section removed for inspection and service without breaking water connections. The bolting between the boiler water bonnet, tube sheet and shell flange shall be independent on each gasket to allow inspection and replacement of either gasket without disturbing the other gasket. Each heater shall have easy access to the individual tubes without moving the heater from its installed position. No overhead clearance shall be required for servicing.

Each packaged heater shall consist of the following components completely factory assembled so the contractor need only connect to services:

(1) Compact 400 water heater with copper silicon shell, copper tubes, copper silicon heat exchanger wrapper and baffles, non-ferrous tube sheet, cast iron or steel boiler water bonnet, steel vertical support skids and lifting lug.

(2) Boiler water control valve—air operated.
  A. _____Two-way with temperature controller and air kit.
  B. _____Three-way diverting with temperature controller and air kit.
  C. _____Three-way mixing with temperature controller and air kit.

(3) Boiler water pump, _____size _____H.P., cast iron body _____G.P.M. _____ft. hd. _____volt _____cycle _____phase, complete with thermostat and flow check valve.

(4) Boiler water inlet and outlet thermometers, tank thermometer in console panel. All thermometers installed with separable thermowells.

(5) P-K ANTICIPATOR control system.

(6) ASME pressure relief valve for domestic water.

(7) Insulation—steel jacketed—1½″ thick fiberglas.

(8) Bronze circulator—1/12 h.p.—115 volt/60 cycle/single phase, wired for continuous operation.

(9) Component piping.

(10) Installation and operation instructions.

Each heater shall be as manufactured by The Patterson-Kelley Co., Inc. The manufacturer shall assume the operational responsibility for all components of the package.

GUIDE SPECIFICATION
HIGH TEMPERATURE WATER TO WATER

Furnish and install where shown on the plans_____Compact Series 400 Water Heater(s), Model Number_____.

Each heater shall be a factory assembled package rated to heat_____G.P.M. of water from_____°F. to_____°F. and control the outlet within 5°F. of the selected temperature when supplied with_____lbs./hr. (_____G.P.M.) high-temperature water entering at_____°F. and leaving at_____°F.

The domestic water pressure drop through the heater shall not exceed_____ p.s.i.g. The high-temperature water pressure drop through the tubes of the heater shall not exceed_____p.s.i.g. Control valve pressure drop not to exceed 5 p.s.i.g.

Each heater shall be constructed and stamped in accordance with Section VIII of the ASME Code for a working pressure of 150 p.s.i.g. shell side, 400 p.s.i.g. tube side. Inspection Form U-1 shall be furnished.

Each heater shall be furnished with an external ANTICIPATOR control system designed to constantly vary the high-temperature water to the heat exchanger in proportion to the variations in flow and temperature of the cold water. Under conditions of no or low flow of cold water, the ANTICIPATOR shall monitor the temperature of the stored water.

Each heater shall be capable of being disassembled and the heat exchanger section removed for inspection and service without breaking water connections. The bolting between the high-temperature water bonnet, tube sheet and shell flange shall be independent of each gasket to allow inspection and replacement of either gasket without disturbing the other gasket. Each heater shall have easy access to the individual tubes without moving the heater from its installed position. No overhead clearance shall be required for servicing.

Each packaged heater shall consist of the following components completely factory assembled so the contractor need only connect to services:

(1) Compact 400 water heater with copper silicon shell, 90-10 cupro nickel tubes, copper silicon heat exchanger wrapper and baffles, non-ferrous tube sheet, steel high-temperature water bonnet, steel vertical support skids and lifting lug.

(2) High-temperature water control valve—300# cast steel, stainless steel trim—air operated.

A. _____Two-way with temperature controller and air kit.

B. _____Three-way diverting with temperature controller and air kit.

C. _____Three-way mixing with temperature controller and air kit.

(3) High-temperature water inlet and outlet thermometers, tank thermometer in console panel. All thermometers installed with separable thermowells.

(4) P-K ANTICIPATOR control system.

(5) ASME pressure relief valve for domestic water.

(6) Insulation—steel jacketed—1½″ thick fiberglas.

(7) Bronze circulator—1/12 h.p.—115 volt/60 cycle/single phase, wired for continuous operation.

(8) Component piping.

(9) Installation and operation instructions.

Each heater shall be as manufactured by The Patterson-Kelley Co., Inc. The manufacturer shall assume the operational responsibility for all components of the package.

P-K
QUALITY PRODUCTS

WATER HEATER DIVISION	ENERGY SOURCE
COMPACT 400 Packaged Minimum Storage Type	Steam or boiler water
CONTROL-FLO 500 Packaged Storage Type	Steam or boiler water
P-KW Packaged Storage Type	Electricity
P-KW SERIES 600 Packaged Storage Type	Electricity
P-KW-S Packaged Storage Type	Electricity and steam or boiler water
P-KD Instantaneous Type	Electricity
311 Load Computer	Electricity
Series 800 Packaged Steam Generator	Electricity
Series 800 Packaged Boiler	Electricity
380 Steam Generator	Steam, high-temperature water
SCALEFREE 231 Packaged Storage Type	Gas—natural, manufactured, LP
SCALEFREE 300 Packaged Storage Type	Fuel Oil
Type "B" and "L" Storage Water Heaters	Steam or boiler water
DS Instantaneous Type	Steam or boiler water
DS Convertors for Heating System	Steam or boiler water

HEAT EXCHANGER DIVISION

Dry Expansion Chillers	Preheaters
Fuel Oil Heaters	Reboilers
Gas Coolers	Reclaimers
Gas Heaters	Refrigeration Condensers
Intercoolers	Sea Water Exchangers
Liquid to Liquid	Steam Generators
Lube Oil Coolers	Vapor Condensers

POCONO FABRICATORS, INC.

Formula C-17 Pre-Krete—high-strength tank lining for neutral or alkaline service
Formula G-8 Pre-Krete—high-strength tank lining for acid service
Fast Set Pre-Krete—Fast-setting cement for repairs and grouting

THE PATTERSON-KELLEY CO., INC.

WATER HEATER DIVISION / EAST STROUDSBURG, PENNSYLVANIA 18301