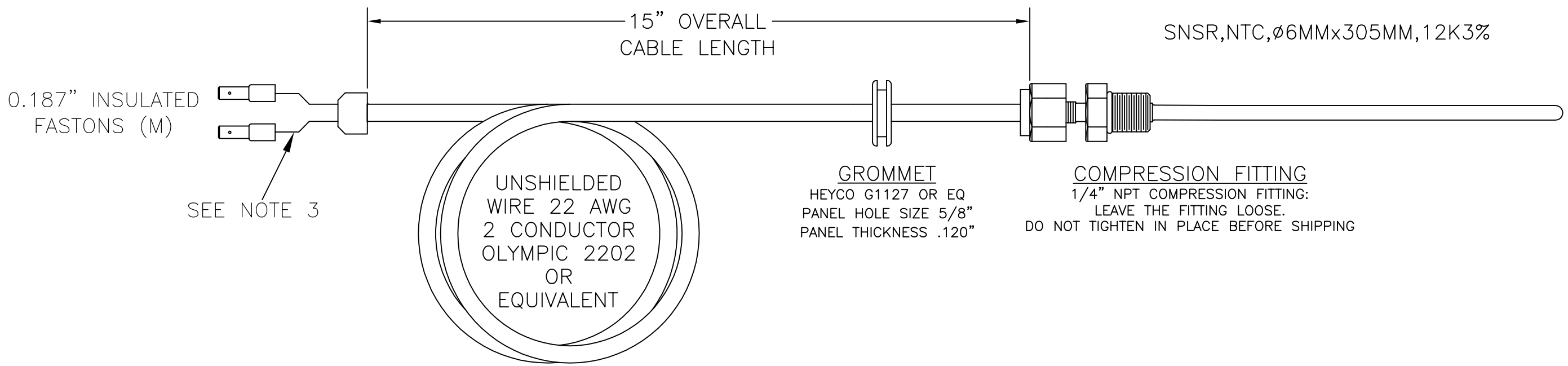

NOTES:

1. POSITION INSULATING SLEEVE AGAINST SENSOR.
2. FILL SLEEVE WITH POTTING COMPOUND.
3. SEAL BARE WIRES WITH HEAT SHRINK TUBING.

REV	DESCRIPTION	BY	CHECK	DATE
C	UPDATED WIRE SIZE; RELEASED FOR PRODUCTION	AMS	ALS	05/15/18
B	UPDATED SENSOR DESCRIPTION STILL IN PROTOTYPE PHASE	ALS	CE	03/09/18
A	RELEASED FOR PROTOTYPE	ALS	CE	02/28/18

TITLE: SNSR_ASSY,UPPER_TANK_RECIRC,HIDRA

HARSCO INDUSTRIAL
Patterson-Kelley
East Stroudsburg, PA 18301
570-476-7261
www.harscopk.com

THIS DRAWING, INFORMATION AND THE SUBJECT MATTER THEREOF, ARE THE SOLE AND EXCLUSIVE PROPERTY OF HARSCO INDUSTRIAL PATTERSON-KELLEY, EAST STROUDSBURG, PA. 18301 USA
IT MAY BE REPRODUCED BY THE PURCHASER OF THIS EQUIPMENT FOR THEIR INTERNAL USE ONLY. IT CANNOT BE DISTRIBUTED TO ANY OTHER FIRM OR PARTY WITHOUT WRITTEN CONSENT FROM OUR COMPANY.

	BY	DATE
DRAWN	ALS	02/22/18
CHECKED	AER	02/22/18
APPROVED	DS	02/22/18

FILE SIZE: B

REFERENCE NUMBER:

DRAWING NUMBER: 2682000067

REV: C